Model	Year	MG	SG	Illustration	VIN No.	Update	14:36	18.02.20100	ETKA
EL	90	9	71	970-00		336			

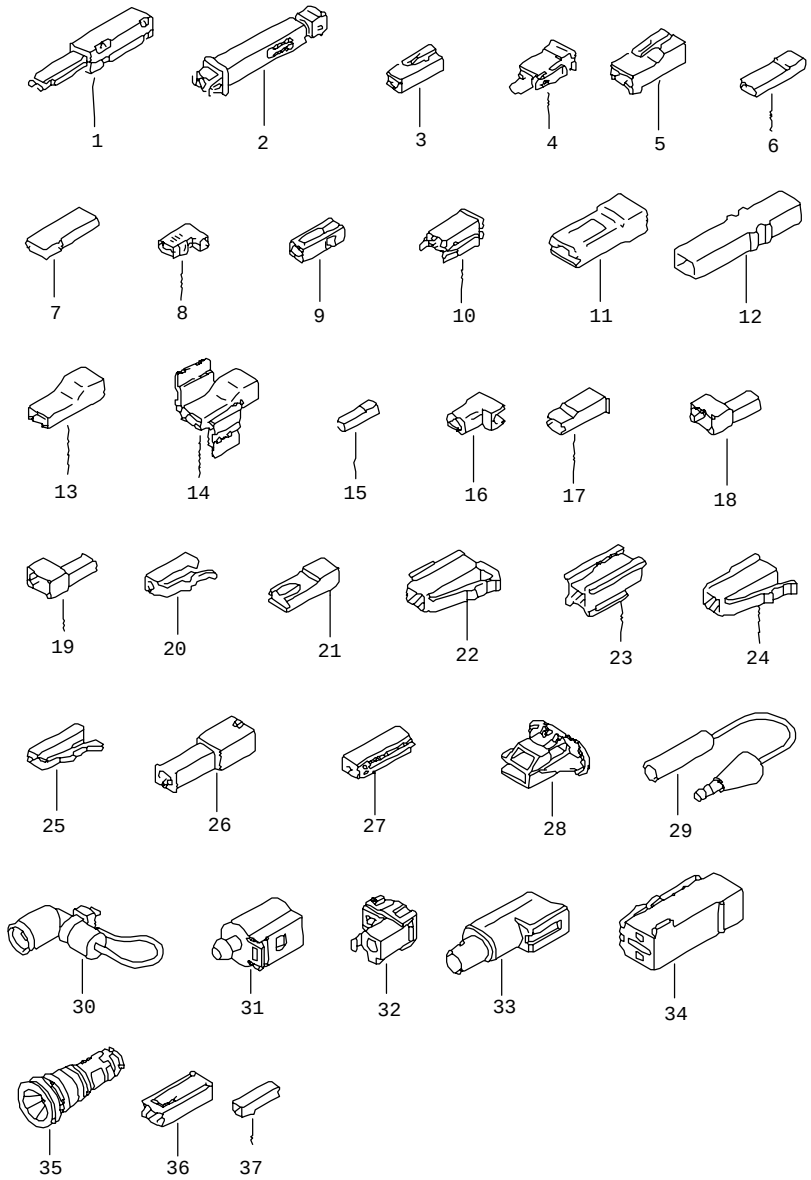

Pos	Part Number	Name	Remarks	Qty	Model
		connector housing	1 pin		
1	059 905 371	diode connector		X	
2	059 905 371 D	diode connector		X	
3	357 907 971 B	terminal pin housing		X	
		for single wiring:	000 979 107	X	1,0
			000 979 204	X	2,5
			000 979 402	X	6,0
4	191 911 920	terminal pin housing		X	
		for single wiring:	000 979 107	X	1,0
			000 979 204	X	2,5
			000 979 402	X	6,0
5	357 915 971 A	terminal pin housing		X	
		for single wiring:	000 979 408	X	6,0
(5)	357 915 971 B	terminal pin housing		X	
		for single wiring:	000 979 408	X	6,0
(5)	357 915 971 C	terminal pin housing		X	
		for single wiring:	000 979 408	X	6,0
6	111 971 921 B	terminal pin housing		X	
		for single wiring:	000 979 107	X	1,0
			000 979 204	X	2,5
			000 979 402	X	6,0
7	1H0 971 921 A	terminal pin housing	1 pin	X	
		for single wiring:	000 979 222	X	2,5
8	211 971 921	angled connector		X	
		for single wiring:	000 979 207	X	2,5
9	4A0 971 921	flat contact housing		X	
		for single wiring:	000 979 135	X	1,0
			000 979 227	X	2,5
			000 979 407	X	6,0
10	191 971 922	terminal pin housing		X	
		for single wiring:	000 979 107	X	1,0
			000 979 204	X	2,5
			000 979 402	X	6,0
10	191 971 922	terminal pin housing		X	
		for single wiring:	000 979 107	X	1,0
			000 979 204	X	2,5
			000 979 402	X	6,0
11	443 971 976	terminal pin housing		X	

Pos	Part Number	Name	Remarks	Qty	Model
12	111 971 977	flat terminal insulator,		X	
		for single wiring:	000 979 104	X	1,0
			000 979 203	X	2,5
			000 979 409	X	6,0
13	171 971 990	terminal pin housing		X	
		for single wiring:	000 979 408	X	6,0
14	443 971 990	terminal pin housing		X	
		for single wiring:	000 979 408	X	6,0
15	431 971 990 A	terminal pin housing		X	
		for single wiring:	000 979 106	X	1,0
			000 979 129	X	1,5
16	825 971 994	angled connector		X	
		for single wiring:	000 979 207	X	2,5
17	431 971 995	terminal pin housing		X	
		for single wiring:	000 979 106	X	1,0
			000 979 212	X	2,5
			000 979 405	X	6,0
18	357 972 577	flat connector housing	white	X	
		for single wiring:	000 979 129	X	1,0
			000 979 219	X	2,5
19	357 972 580	flat connector housing	black	X	
		for single wiring:	000 979 129	X	1,0
			000 979 219	X	2,5
20	701 906 231	flat contact housing		X	
		for single wiring:	000 979 133	X	1,0
			000 979 133 A	X	1,0
			000 979 217	X	2,5
21	447 911 921	terminal pin housing		X	
		for single wiring:	000 979 107	X	1,0
			000 979 204	X	2,5
22	321 945 246	flat contact housing		X	
		for single wiring:	000 979 135	X	1,0
			000 979 227	X	2,5
			000 979 407	X	6,0
23	321 945 246 A	flat contact housing with retainer guide		X	
		for single wiring:	000 979 135	X	1,0
			000 979 227	X	2,5
			000 979 407	X	6,0
24	321 945 246 B	flat contact housing		X	
		for single wiring:	000 979 135	X	1,0
			000 979 227	X	2,5
			000 979 407	X	6,0

Pos	Part Number	Name	Remarks	Qty	Model
(24)	7D0 937 701 KD	flat contact housing	1 pin	1	
		for single wiring:	000 979 133	1	1,0
			000 979 133 A	1	1,0
			000 979 225	1	2,5
(24)	7D0 937 711	flat contact housing with helper contact catch		1	1 POLIG
		for single wiring:	000 979 135	1	1,0
			000 979 135 A	1	1,0
			000 979 227	1	2,5
			000 979 407	1	6,0
25	1H0 972 701	flat contact housing	1 pin	X	
		for single wiring:	000 979 131	X	1,0
26	535 972 711 H	flat connector housing	1 pin	X	
		for single wiring:	000 979 302	X	4,0
27	3A0 972 701 H	flat contact housing	1 pin	X	
		for single wiring:	000 979 133	X	1,0
			000 979 133 A	X	1,0
			000 979 217	X	2,5
28	6N0 971 701	terminal pin housing	1 pin	1	
		for single wiring:	000 979 207	X	2,5
28	6N0 971 701	terminal pin housing	1 pin	1	
		for single wiring:	000 979 207	X	2,5
29	2TA 971 943	wiring harnessadapter	1 pin	1	L80
30	2TA 973 111	angled connector with loom	1 pin	1	L80
31	1J0 973 701	flat contact housing	1 pin	1	
		for single wiring:	000 979 131	1	
32	2D0 971 989 T	flat contact housing	1 pin	1	
33	7M0 972 711	flat contact housing	1 pin	1	
34	7M0 972 751 B	flat contact housing	1 pin	1	
		for single wiring:	000 979 406	X	
35	2D0 971 989 DC	flat contact housing	1 pin	1	
36	6N0 971 921	terminal pin housing		1	
37	2D0 971 989 BR	flat contact housing	4 pin	1	
		for single wiring:	000 979 106		

Model	Year	MG	SG	Illustration	VIN No.	Update	14:36	18.02.20100	ETKA
EL	90	9	71	970-05		336			

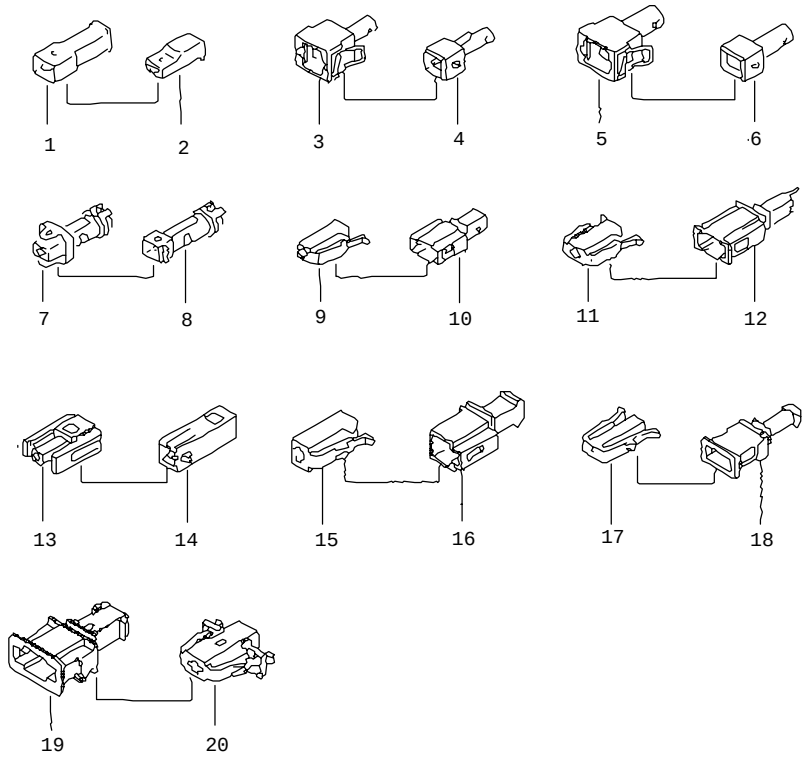

Pos	Part Number	Name	Remarks	Qty	Model
		connector housing	1 pin		
1	161 971 976 A	flat connector housing		X	
		for single wiring:	000 979 104	X	1,0
			000 979 203	X	2,5
			000 979 409	X	6,0
2	161 971 990 A	terminal pin housing		X	
		for single wiring:	000 979 107	X	1,0
			000 979 204	X	2,5
			000 979 402	X	6,0
3	357 972 751	flat contact housing		X	
		for single wiring:	000 979 133	X	1,0
			000 979 133 A	X	1,0
			000 979 217	X	2,5
4	357 972 761	flat contact housing		X	
		for single wiring:	000 979 129	X	1,0
			000 979 219	X	2,5
5	357 972 771	flat contact housing		X	
		for single wiring:	000 979 135	X	1,0
			000 979 227	X	2,5
			000 979 407	X	6,0
6	357 972 781	flat contact housing		X	
		for single wiring:	000 979 130	X	1,0
			000 979 219	X	2,5
			000 979 302	X	4,0
7	813 972 924	flat contact housing with helper contact catch and grommet		X	
		for single wiring:	000 979 135	X	1,0
			000 979 227	X	2,5
			000 979 407	X	6,0
8	813 972 925	flat contact housing with helper contact catch and grommet		X	
		for single wiring:	000 979 104	X	1,0
			000 979 203	X	2,5
			000 979 409	X	6,0
9	191 972 701	terminal pin housing	1 pin	X	
		for single wiring:	000 979 133	X	1,0
			000 979 133 A	X	1,0
			000 979 217	X	2,5
10	191 972 711	flat connector housing		X	
		for single wiring:	000 979 129	X	1,0
			000 979 219	X	2,5

Pos	Part Number	Name	Remarks	Qty	Model
11	191 972 751	flat contact housing		X	
		for single wiring:	000 979 135	X	1,0
			000 979 227	X	2,5
			000 979 407	X	6,0
12	191 972 761	flat contact housing		X	
		for single wiring:	000 979 219	X	2,5
			000 979 302	X	4,0
13	8A0 972 623	rd. connector sleeve housing		X	
		for single wiring:	000 979 117	X	1,0
			000 979 213	X	2,5
14	8A0 972 643	round connector housing	1 pin	X	
		for single wiring:	000 979 118	X	1,0
			000 979 215	X	2,5
15	3A0 972 751 H	flat contact housing	1 pin	X	
		for single wiring:	000 979 135	X	1,0
			000 979 227	X	2,5
			000 979 407	X	6,0
16	3A0 972 761 H	flat contact housing	1 pin	X	
		for single wiring:	000 979 130	X	1,0
			000 979 219	X	2,5
			000 979 302	X	4,0
17	535 972 701	flat contact housing	1 pin	1	
		for single wiring:	000 979 131	X	1,0
			000 979 131 A	X	1,0
18	535 972 711	flat contact housing	1 pin	X	
		for single wiring:	000 979 132	X	1,0
			000 979 132 A	X	1,0
19	1J0 972 751	flat contact housing	1 pin	1	
		for single wiring:	000 979 133	X	1,0
20	1J0 972 761	flat contact housing with helper contact catch	1 pin black	1	
		for single wiring:	000 979 136	X	1,0

Pos	Part Number	Name	Remarks	Qty	Model

Model	Year	MG	SG	Illustration	VIN No.	Update	14:37	18.02.20100	ETKA
EL	90	9	71	970-10		336			

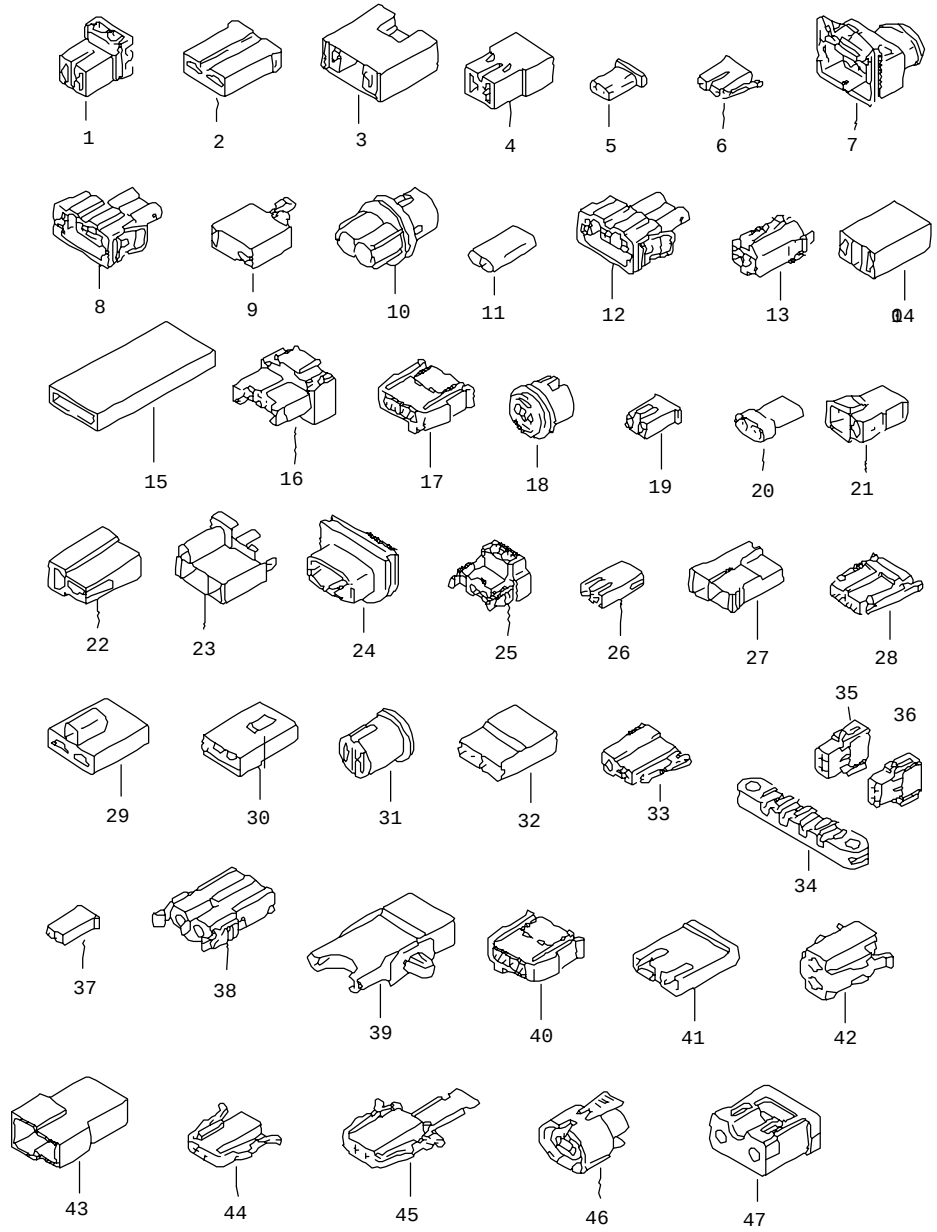

Pos	Part Number	Name	Remarks	Qty	Model
		connector housing	2 pin		
1	171 035 447	angled connector	6,3	X	
		for single wiring:	000 979 207	X	2,5
2	171 906 231	terminal pin housing		X	
		for single wiring:	000 979 107	X	1,0
			000 979 204	X	2,5
			000 979 402	X	6,0
3	171 906 231 B	terminal pin housing		X	
		for single wiring:	000 979 107	X	1,0
			000 979 204	X	2,5
			000 979 402	X	6,0
4	2D0 971 989 CN	flat contact housing	2 pin	1	
		for single wiring:	000 979 107	X	1,0
			000 979 204	X	2,5
			000 979 402	X	6,0
5	443 906 231	terminal pin housing		X	
		for single wiring:	000 979 105	X	1,0
			000 979 106	X	1,0
6	867 906 231	terminal pin housing		X	
		for single wiring:	000 979 105	X	1,0
			000 979 106	X	1,0
7	191 906 232 A	flat contact housing		X	
		for single wiring:	000 979 135	X	1,0
			000 979 227	X	2,5
			000 979 407	X	6,0
8	357 906 232	flat contact housing		X	
		for single wiring:	000 979 135	X	1,0
			000 979 227	X	2,5
			000 979 407	X	6,0
9	321 906 233	terminal pin housing		X	
		for single wiring:	000 979 107	X	1,0
			000 979 204	X	2,5
			000 979 402	X	6,0
10	2D0 971 989 AC	flat contact housing	2 pin	1	
		for single wiring:	000 979 147	X	
10	2D0 971 989 AC	flat contact housing	2 pin	1	
		for single wiring:	000 979 147	X	
11	058 906 293	terminal pin housing		X	
		for single wiring:	000 979 105	X	1,0
			000 979 106	X	1,0

Pos	Part Number	Name	Remarks	Qty	Model
12	357 906 752	flat contact housing		X	
		for single wiring:	000 979 133	X	1,0
			000 979 133 A	X	1,0
			000 979 217	X	2,5
13	191 919 231	flat contact housing		X	
		for single wiring:	000 979 135	X	1,0
			000 979 227	X	2,5
			000 979 407	X	6,0
14	431 919 381	terminal pin housing		X	
		for single wiring:	000 979 107	X	1,0
			000 979 204	X	2,5
			000 979 402	X	6,0
15	111 937 078	cable connector		X	
16	1H0 937 530	fuse box for flat fuses	2 pin	X	
		for single wiring:	000 979 135	X	1,0
			000 979 227	X	2,5
			000 979 407	X	6,0
(16)	161 937 501	fuse box for flat fuses		X	
		for single wiring:	000 979 135	X	1,0
			000 979 227	X	2,5
			000 979 407	X	6,0
17	321 945 247	flat contact housing		X	
		for single wiring:	000 979 135	X	1,0
			000 979 227	X	2,5
			000 979 407	X	6,0
18	111 945 525	terminal pin housing		X	
		for single wiring:	000 979 107	X	1,0
			000 979 204	X	2,5
			000 979 402	X	6,0
18	111 945 525	terminal pin housing		X	
		for single wiring:	000 979 107	X	1,0
			000 979 204	X	2,5
			000 979 402	X	6,0
19	357 947 231	flat contact housing		X	
		for single wiring:	000 979 105	X	1,0
			000 979 106	X	1,0
20	431 959 871	rd. connector sleeve housing		X	
		for single wiring:	000 979 110	X	1,0
			000 979 211	X	2,5

Pos	Part Number	Name	Remarks	Qty	Model
21	171 971 934	terminal pin housing		X	
		for single wiring:	000 979 104	X	1,0
			000 979 107	X	1,0
			000 979 203	X	2,5
			000 979 204	X	2,5
			000 979 402	X	6,0
			000 979 408	X	6,0
22	2D0 971 989 BB	flat connector housing	2 pin	1	
		for single wiring:	000 979 107	X	1,0
			000 979 204	X	2,5
			000 979 402	X	6,0
23	357 971 975	terminal pin housing		X	
		for single wiring:	000 979 104	X	1,0
			000 979 129	X	1,0
			000 979 203	X	2,5
			000 979 219	X	2,5
			000 979 409	X	6,0
24	251 971 976	flat connector housing		X	
		for single wiring:	000 979 104	X	1,0
			000 979 203	X	2,5
			000 979 409	X	6,0
25	447 971 988	terminal pin housing		X	
		for contact:	447 972 980	X	0,5-4,0
26	441 971 989	terminal pin housing		X	
		for single wiring:	000 979 133	X	1,0
			000 979 133 A	X	1,0
			000 979 217	X	2,5
26	441 971 989	terminal pin housing		X	
		for single wiring:	000 979 133	X	1,0
			000 979 133 A	X	1,0
			000 979 217	X	2,5
27	443 971 989	terminal pin housing		X	
		for single wiring:	000 979 106	X	1,0
			000 979 212	X	2,5
			000 979 405	X	6,0
28	191 971 993	flat contact housing		X	
		for single wiring:	000 979 135	X	1,0
			000 979 227	X	2,5
			000 979 407	X	6,0
29	431 971 993	terminal pin housing		X	
		for single wiring:	000 979 107	X	1,0
			000 979 204	X	2,5
			000 979 402	X	6,0

Pos	Part Number	Name	Remarks	Qty	Model
30	447 971 993	flat connector housing		X	
		for single wiring:	000 979 104	X	1,0
			000 979 203	X	2,5
			000 979 409	X	6,0
31	810 971 993	terminal pin housing		X	
		for single wiring:	000 979 107	X	1,0
			000 979 204	X	2,5
			000 979 402	X	6,0
32	443 971 996	terminal pin housing		X	
		for single wiring:	000 979 106	X	1,0
			000 979 212	X	2,5
			000 979 405	X	6,0
33	171 971 997 D	flat contact housing		X	
		for single wiring:	000 979 135	X	1,0
			000 979 227	X	2,5
			000 979 407	X	6,0
34	443 972 559	retaining strip for diagnosis plug		X	
35	443 972 577 E	flat contact housing	white	X	
		for single wiring:	000 979 133	X	1,0
			000 979 133 A	X	1,0
			000 979 217	X	2,5
36	443 972 580	flat contact housing	black	X	
		for single wiring:	000 979 133	X	1,0
			000 979 133 A	X	1,0
			000 979 217	X	2,5
37	443 972 992	terminal pin housing		X	
		for single wiring:	000 979 105	X	1,0
			000 979 106	X	1,0
38	2D0 971 989 A	flat contact housing	2 pin	1	
39	441 937 501	fuse box for flat fuses		X	
		for single wiring:	000 979 135	X	1,0
			000 979 227	X	2,5
			000 979 407	X	6,0
40	321 945 247 A	flat contact housing		X	
		for single wiring:	000 979 135	X	1,0
			000 979 227	X	2,5
			000 979 407	X	6,0
41	431 971 989	terminal pin housing		X	
		for single wiring:	000 979 202	X	2,5
42	191 972 771	flat contact housing		X	
		for single wiring:	000 979 135	X	1,0
			000 979 227	X	2,5
			000 979 407	X	6,0
43	2D0 971 989 E	flat contact housing	2 pin	X	
		for single wiring:	000 979 222	X	
44	1H0 972 721	flat contact housing	2 pin	X	
		for single wiring:	000 979 131	X	1,0
			000 979 131 A	X	1,0
45	1H5 972 702	flat contact housing	2 pin	X	
		for single wiring:	000 979 133	X	1,0
			000 979 133 A	X	1,0
			000 979 217	X	2,5
46	1H0 972 117	flat contact housing with gasket	2 pin	X	
		for single wiring:	000 979 002	X	0,5
47	2D0 971 989 DE	flat connector housing	2 pin	1	
		for single wiring:	2D0 972 982 D		

Model	Year	MG	SG	Illustration	VIN No.	Update				
EL	90	9	71	970-11		336	14:37	18.02.20100	ETKA	Audi

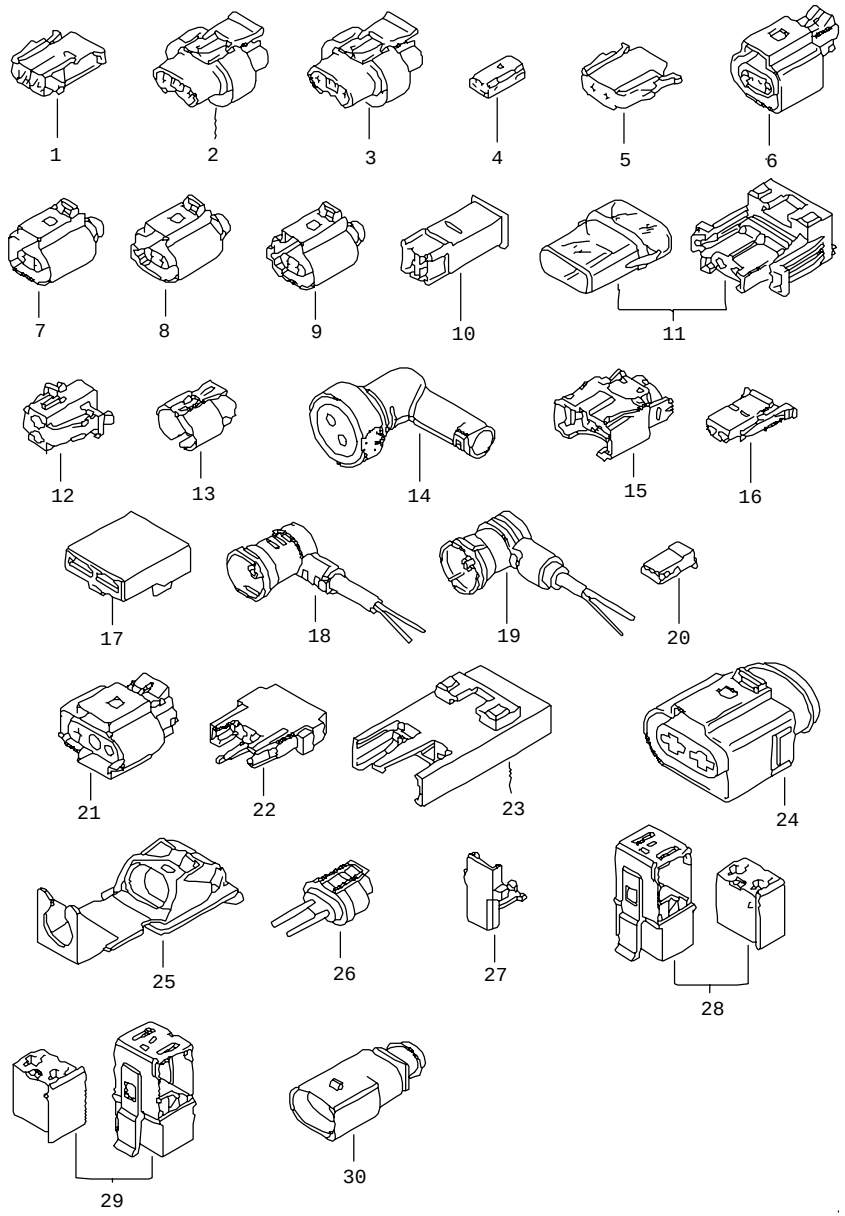

Pos	Part Number	Name	Remarks	Qty	Model
		connector housing	2 pin		
1	357 919 968	flat contact housing with helper contact catch for vehicles with trailers	2 pin green	1	
		for single wiring:	000 979 133	X	1,0
			000 979 133 A	X	1,0
			000 979 217	X	2,5
2	1H0 941 113	flat contact housing connecting piece twin headlamps	56B	2	
		for single wiring:	000 979 133	X	1,0
			000 979 133 A	X	1,0
			000 979 217	X	2,5
3	1H0 941 113 A	flat contact housing connecting piece twin headlamps	56A	2	
		for single wiring:	000 979 133	X	1,0
			000 979 133 A	X	1,0
			000 979 217	X	2,5
4	8D0 972 623 AA	flat contact housing	2 pin	1	
		for single wiring:	000 979 003 A	X	0,5
(4)	3B0 973 115	flat contact housing	2 pin	X	
		for single wiring:	000 979 009	X	0,5
5	1H0 972 702	flat contact housing	2 pin	1	
		for single wiring:	000 979 106	X	1,0
6	6N0 973 702	flat contact housing	2 pin	1	
		for single wiring:	000 979 131	X	1,0
			000 979 131 A	X	1,0
7	1J0 973 702	flat connector housing	2 pin black	1	
		for single wiring:	000 979 131	X	1,0
			000 979 131 A	X	1,0
8	1J0 973 702 A	flat connector housing	2 pin brown	1	
		for single wiring:	000 979 131	X	1,0
			000 979 131 A	X	1,0
9	1J0 973 702 B	flat connector housing	2 pin red	1	
		for single wiring:	000 979 131	X	1,0
			000 979 131 A	X	1,0
10	8D0 971 959	flat contact housing	2 pin	1	
		for single wiring:	000 979 212	X	2,5

Pos	Part Number	Name	Remarks	Qty	Model
11	1J0 937 530	fuse holder	2 pin	X	
		for single wiring:	000 979 227	X	2,5
12	1J0 972 771	flat contact housing	2 pin	1	
		for single wiring:	000 979 135	3	1,0
			000 979 227	1	2,5
13	1J0 973 117	flat contact housing	2 pin	1	
		for single wiring:	000 979 003 A	X	0,5
14	2D0 971 989 AB	round connector housing	2 pin	1	
15	037 973 202	flat contact housing	2 pin	1	
		for single wiring:	000 979 133 A	X	1,0
			000 979 133 AB	X	1,0
16	2D0 971 989 AE	flat contact housing	2 pin	1	
17	2D0 971 989 AT	flat contact housing	2 pin	1	
		for single wiring:	000 979 408	X	6,0
18	2D0 971 989 N	flat contact housing	2 pin	1	
19	2D0 971 989 P	flat contact housing	2 pin	1	
20	4B0 973 119	flat contact housing	2 pin	X	0,5
		for single wiring:	000 979 003 A	X	
21	7M0 973 202	flat contact housing	2 pin	1	
		for single wiring:	000 979 133	X	1,0
			000 979 133 A	X	1,0
22	701 937 530	fuse box for flat fuses	2 pin	X	
23	3A0 937 501 A	fuse holder	2 pin	1	ecomatic
		for single wiring:	000 979 406	X	6,0
24	4B0 971 955	flat contact housing	2 pin	1	
		for single wiring:	000 979 411	X	6,0
25	7M0 973 802 B	flat contact housing	2 pin	1	
		for single wiring:	000 979 132	X	1,0
			000 979 132 A	X	1,0
26	2TA 973 112 B	cylindrical connector with retaining lug	2 pin	1	
27	038 906 231	flat contact housing	2 pin	1	
		for single wiring:			
28	4B0 971 959	flat contact housing	2 pin black	1	
		for single wiring:	000 979 411		6,0
29	4B0 971 959 A	flat contact housing	2 pin brown	1	
		for single wiring:	000 979 411		6,0
30	8D0 973 822	flat contact housing	2 pin	1	
		for single wiring:	000 979 134	X	1,0
			000 979 134 A	X	1,0
			000 979 226	X	2,5
			000 979 226 A	X	2,5
-	1J0 973 772	flat connector housing with additional contact catch	2 pin	1	
		for single wiring:	000 979 131	X	
			000 979 131 A	X	

Pos	Part Number	Name	Remarks	Qty	Model
		connector housing	2 pin		
-	4D0 971 992	flat connector housing with additional contact catch	2 pin	1	
		for single wiring:	000 979 141	X	1,0
-	4B0 937 530	fuse holder	2 pin	X	
		flat fuse 19/2x5			
		for single wiring:	000 979 135	X	1,0.
			000 979 227	X	2,5
			000 979 407	X	6,0

Model	Year	MG	SG	Illustration	VIN No.	Update	14:37	18.02.20100	ETKA
EL	90	9	71	970-20		336			

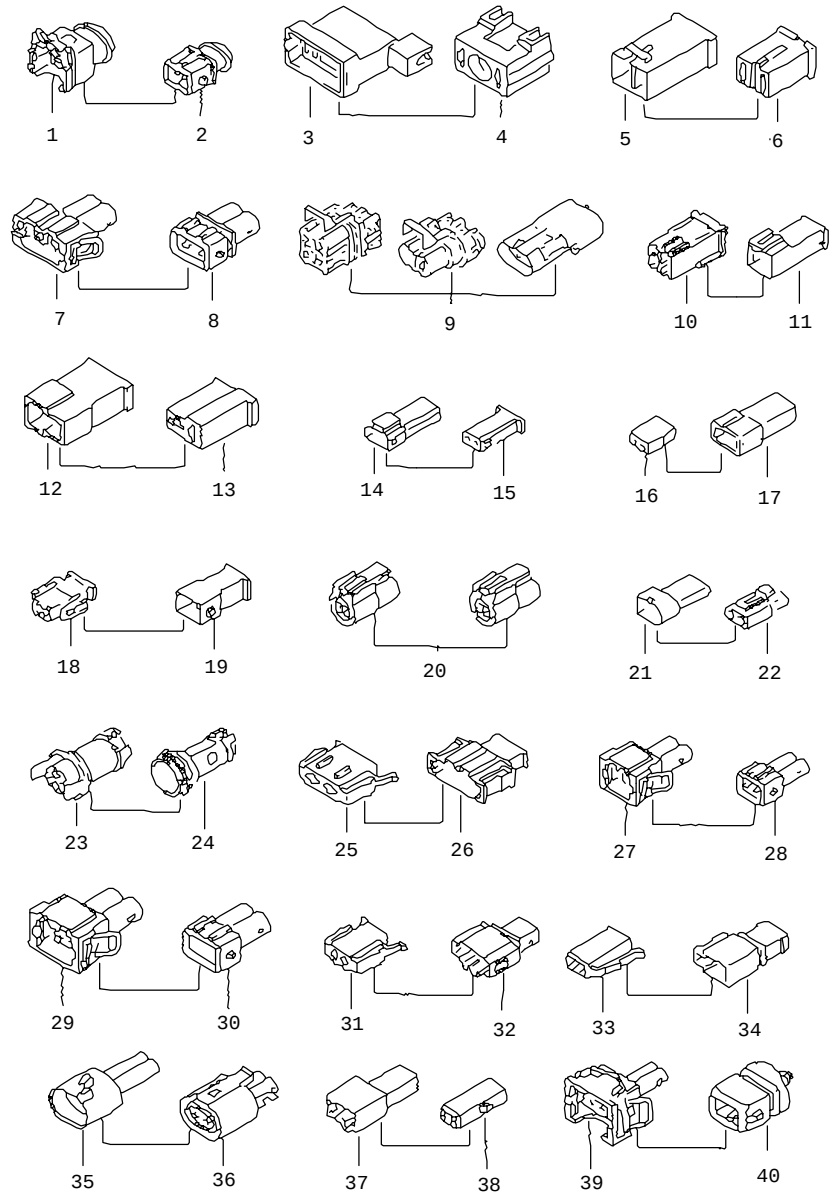

Pos	Part Number	Name	Remarks	Qty	Model
		connector housing	2 pin		
1	443 906 232	flat contact housing	2 pin	1	
		for single wiring:	000 979 133	X	1,0
			000 979 133 A	X	1,0
			000 979 217	X	2,5
2	8D0 971 946	flat contact housing with helper contact catch	2 pin black	1	
		for single wiring:	000 979 134	X	1,0
3	--- --- ---	no longer available			
4	--- --- ---	no longer available			
5	325 941 599	flat connector housing	2 pin	X	
		for single wiring:	000 979 104	X	1,0
			000 979 203	X	2,5
			000 979 409	X	6,0
6	321 941 600	terminal pin housing		X	
		for single wiring:	000 979 107	X	1,0
			000 979 204	X	2,5
			000 979 402	X	6,0
7	357 951 772	flat contact housing		X	
		for single wiring:	000 979 107	X	1,0
			000 979 204	X	2,5
			000 979 402	X	6,0
8	357 951 782	flat contact housing		X	
		for single wiring:	000 979 130	X	1,0
			000 979 219	X	2,5
			000 979 302	X	4,0
9	443 971 973 A	1 set of connectors		X	air condit.
10	443 971 961	terminal pin housing		X	
		for single wiring:	000 979 106	X	1,0
			000 979 212	X	2,5
			000 979 405	X	6,0
11	443 971 962	flat connector housing		X	
		for single wiring:	000 979 104	X	1,0
			000 979 203	X	2,5
			000 979 409	X	6,0
12	161 971 988 C	flat connector housing		X	
		for single wiring:	000 979 104	X	1,0
			000 979 203	X	2,5
			000 979 409	X	6,0
13	161 971 989 C	terminal pin housing		X	
		for single wiring:	000 979 107	X	1,0
			000 979 204	X	2,5
			000 979 402	X	6,0

Pos	Part Number	Name	Remarks	Qty	Model
14	171 971 998 A	round connector housing		X	
		for single wiring:	000 979 109	X	1,0
			000 979 209	X	2,5
15	171 971 999 A	rd. connector sleeve housing		X	
		for single wiring:	000 979 108	X	1,0
			000 979 208	X	2,5
16	810 971 989	terminal pin housing		X	
		for single wiring:	000 979 106	X	1,0
17	823 971 988	flat connector housing		X	
		for single wiring:	000 979 103	X	1,0
18	893 971 632	flat contact housing		X	
		for single wiring:	000 979 133	X	1,0
			000 979 133 A	X	1,0
			000 979 217	X	2,5
19	4B0 971 992	flat connector housing	2 pin	1	
		for single wiring:	000 979 134	X	1,0
			000 979 134 A	X	1,0
			000 979 226	X	2,5
			000 979 226 A	X	2,5
(19)	893 971 992	terminal pin housing		X	
		for single wiring:	000 979 103	X	1,0
20	893 972 561	1 set of connectors		X	air condit.
21	811 972 575	round connector housing		X	
		for single wiring:	000 979 111	X	1,0
			000 979 210	X	2,5
			000 979 304	X	4,0
22	811 972 577	rd. connector sleeve housing		X	
		for single wiring:	000 979 110	X	1,0
			000 979 211	X	2,5
			000 979 305	X	4,0
23	813 972 923	flat contact housing with helper contact catch and grommet		X	
		for single wiring:	000 979 135	X	1,0
			000 979 227	X	2,5
			000 979 407	X	6,0
24	813 972 926	flat contact housing with helper contact catch and grommet		X	
		for single wiring:	000 979 104	X	1,0
			000 979 203	X	2,5
			000 979 409	X	6,0

Pos	Part Number	Name	Remarks	Qty	Model
25	1J0 972 752	flat contact housing	2 pin	X	
		for single wiring:	000 979 133	X	1,0
			000 979 133 A	X	1,0
			000 979 225	X	2,5
(25)	191 972 752	flat contact housing		X	
		for single wiring:	000 979 133	X	1,0
			000 979 133 A	X	1,0
			000 979 217	X	2,5
26	191 972 762	flat contact housing		X	
		for single wiring:	000 979 130	X	1,0
			000 979 219	X	2,5
			000 979 302	X	4,0
(26)	1H0 972 762	contact bridge	2 pin		
27	357 972 752	flat contact housing		X	
		for single wiring:	000 979 133	X	1,0
			000 979 133 A	X	1,0
			000 979 217	X	2,5
27	357 972 752	flat contact housing		X	
		for single wiring:	000 979 133	X	1,0
			000 979 133 A	X	1,0
			000 979 217	X	2,5
28	357 972 762	flat connector housing		X	
		for single wiring:	000 979 129	X	1,0
			000 979 219	X	2,5
29	357 972 772	flat contact housing		X	
		for single wiring:	000 979 135	X	1,0
			000 979 227	X	2,5
			000 979 407	X	6,0
30	357 972 782	flat contact housing		X	
		for single wiring:	000 979 130	X	1,0
			000 979 219	X	2,5
			000 979 302	X	4,0
31	191 972 702	flat contact housing		X	
		for single wiring:	000 979 133	X	1,0
			000 979 133 A	X	1,0
			000 979 217	X	2,5
32	191 972 712	flat connector housing		X	
		for single wiring:	000 979 129	X	1,0
			000 979 219	X	2,5
33	191 906 231 A	flat contact housing		X	
		for single wiring:	000 979 133	X	1,0
			000 979 133 A	X	1,0
			000 979 217	X	2,5

Pos	Part Number	Name	Remarks	Qty	Model
34	1H0 906 712	flat connector housing		X	
		for single wiring:	000 979 129	X	1,0
			000 979 219	X	2,5
35	357 973 332	flat contact housing		X	
		for single wiring:	000 979 129	X	1,0
			000 979 219	X	2,5
36	357 973 202	flat contact housing with gasket		X	
		for single wiring:	000 979 133	X	1,0
			000 979 133 A	X	1,0
			000 979 217	X	2,5
37	1J0 973 332	flat contact housing	2 pin	1	
		for single wiring:	000 979 132	X	1,0
			000 979 132 A	X	1,0
38	1J0 973 119	flat contact housing	2 pin	1	
		for single wiring:	000 979 131	X	1,0
			000 979 131 A	X	1,0
(38)	1H0 973 121 C	flat contact housing	2 pin	X	
		for single wiring:	000 979 131	X	1,0
			000 979 131 A	X	1,0
39	037 906 240	flat contact housing	2 pin	X	
		for single wiring:	000 979 126	X	1,0
			000 979 217	X	2,5
40	701 971 907	mounting		X	

Pos	Part Number	Name	Remarks	Qty	Model

Model	Year	MG	SG	Illustration	VIN No.	Update	14:38	18.02.20100	ETKA
EL	90	9	71	970-21		336			

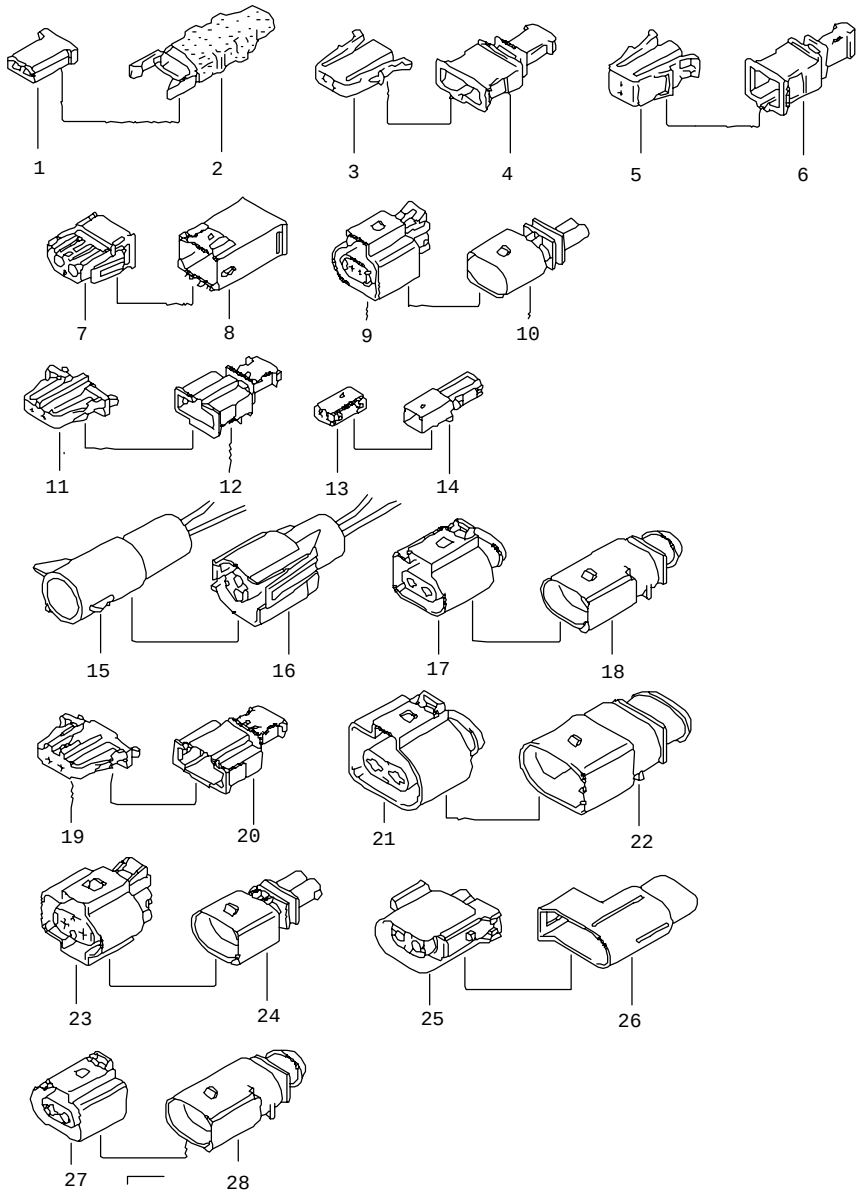

Pos	Part Number	Name	Remarks	Qty	Model
		connector housing	2 pin		
1	443 906 231	terminal pin housing	2 pin	X	
		for single wiring:	000 979 105	X	1,0
			000 979 106	X	1,0
2	4A0 906 238	plug bridge		1	
3	1H0 972 702 A	flat contact housing	2 pin	1	
		for single wiring:	000 979 131	X	1,0
			000 979 131 A	X	1,0
4	535 972 712	flat contact housing	2 pin	1	
		for single wiring:	000 979 132	X	1,0
			000 979 132 A	X	1,0
5	535 972 721	flat contact housing	2 pin	X	
		for single wiring:	000 979 132	X	1,0
6	535 972 731	flat connector housing	2 pin	X	
		for single wiring:	000 979 131	X	1,0
7	443 971 943	rd. connector sleeve housing		X	
		for single wiring:	000 979 120	X	1,0
			000 979 120 A	X	1,0
8	8D0 971 945	round connector housing with contact lock	2 pin black	1	
		for single wiring:	000 979 119	X	1,0
			000 979 119 A	X	1,0
			000 979 216	X	2,5
9	6N0 973 702	flat contact housing	2 pin	1	
		for single wiring:	000 979 131	X	1,0
			000 979 131 A	X	1,0
10	6N0 973 802	flat contact housing	2 pin	1	
		for single wiring:	000 979 132	X	1,0
			000 979 132 A	X	1,0
11	3B0 972 702	flat contact housing with helper contact catch	2 pin black	1	
		for single wiring:	000 979 131	X	1,0
			000 979 131 A	X	1,0
		GEGENSTUECK:	3B0 972 712	X	
11	3B0 972 702	flat contact housing with helper contact catch	2 pin black	1	
		for single wiring:	000 979 131	X	1,0
			000 979 131 A	X	1,0
		GEGENSTUECK:	3B0 972 712	X	
(11)	1J0 971 972	flat connector housing loudspeaker	2 pin	1	
		for single wiring:	000 979 131	X	1,0
			000 979 131 A	X	1,0

Pos	Part Number	Name	Remarks	Qty	Model
(11)	3B0 973 702	flat connector housing acceleration sensor	2 pin yellow	1	
		for single wiring:	000 979 131	X	1,0
			000 979 131 A	X	1,0
12	3B0 972 712	flat contact housing with helper contact catch	2 pin	X	
		for single wiring:	000 979 132	X	1,0
13	8D0 972 623 AA	flat contact housing	2 pin	1	
		for single wiring:	000 979 003 A	X	1,0
14	8D0 972 643	flat contact housing	2 pin	1	
15	2TA 973 102 A	round connector housing	2 pin	1	L 80
16	2TA 973 112 A	cylindrical connector with retaining lug	2 pin	1	L 80
17	1J0 973 722	flat contact housing with helper contact catch	2 pin black	1	
		for single wiring:	000 979 133	X	1,0
			000 979 133 A	X	1,0
			000 979 225	X	2,5
			000 979 225 A	X	2,5
18	8D0 973 822	flat contact housing	2 pin	1	
		for single wiring:	000 979 134	X	1,0
			000 979 134 A	X	1,0
			000 979 226	X	2,5
			000 979 226 A	X	2,5
19	1J0 972 702	flat contact housing	2 pin	1	
		for single wiring:	000 979 133	X	1,0
			000 979 133 A	X	1,0
20	1J0 972 712	flat connector housing with additional contact catch	2 pin black	1	
		for single wiring:	000 979 134	X	1,0
			000 979 134 A	X	1,0
21	1J0 973 752	flat contact housing	2 pin	1	
		for single wiring:	000 979 135	X	1,0
			000 979 227 A	X	2,5
22	1J0 973 852	flat contact housing	2 pin	1	
		for single wiring:	000 979 136	X	1,0
			000 979 228	X	2,5
23	3B0 973 722	flat contact housing	2 pin	2	
		for single wiring:	000 979 217	X	2,5
24	3B0 973 822	flat contact housing	2 pin	1	
		for single wiring:	000 979 129	X	1,0
25	7M0 906 232 R	rd. connector sleeve housing	2 pin	1	
		for single wiring:	000 979 145	X	1,0
			000 979 238	X	2,5
26	7M0 972 731	flat contact housing	2 pin	1	
		for single wiring:	000 979 146	X	1,0
			000 979 239	X	2,5
27	1J0 973 702	flat connector housing	2 pin black	1	
		for single wiring:	000 979 131	X	1,0
			000 979 131 A	X	1,0
28	1J0 973 802	flat contact housing	2 pin	1	
		for single wiring:	000 979 132	X	1,0
			000 979 132 A	X	1,0

Model	Year	MG	SG	Illustration	VIN No.	Update	14:38	18.02.20100	ETKA
EL	90	9	71	970-30		336			

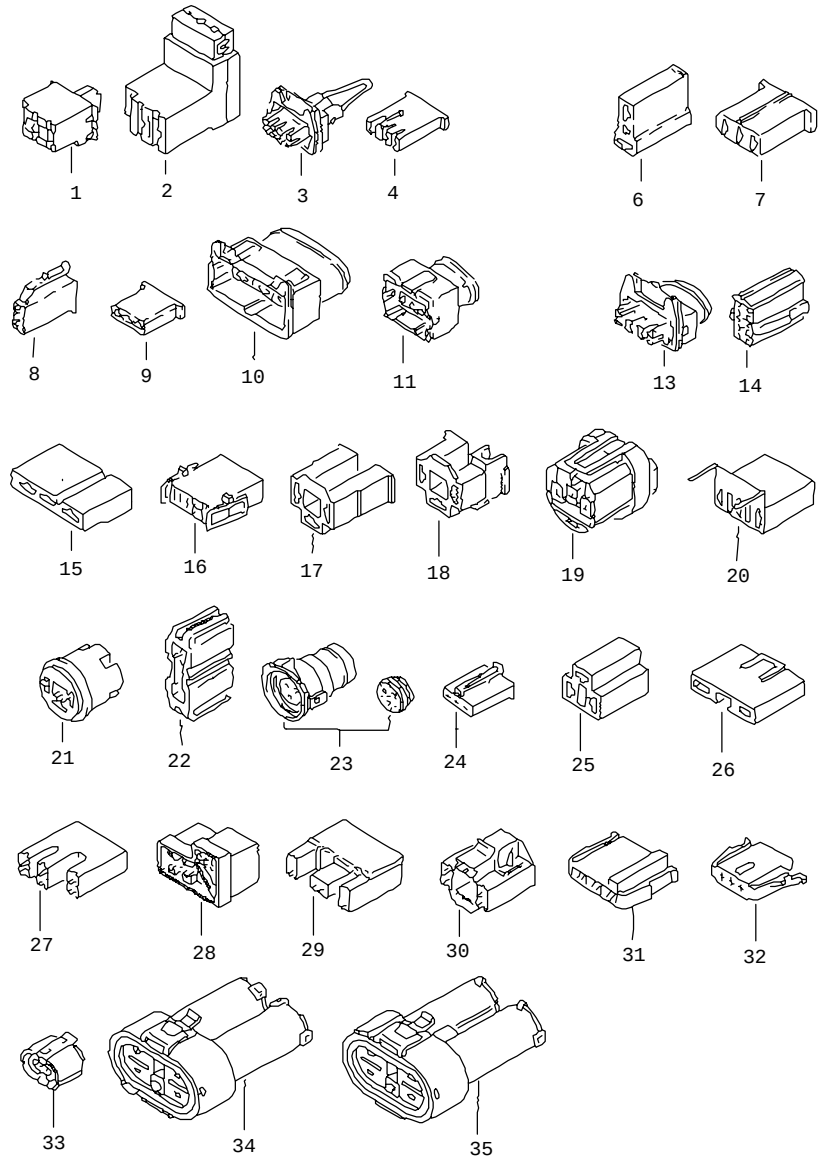

Pos	Part Number	Name	Remarks	Qty	Model
		connector housing	3 pin		
1	171 903 845	terminal pin housing		X	
		for single wiring:	000 979 207	X	2,5
			000 979 303	X	4,0
2	055 903 845 C	angled connector	3 pin	X	
		for single wiring:	000 979 107	1	1,0
			000 979 204	1	2,5
			000 979 224	2	2,5
			000 979 408	2	6,0
3	357 905 327	flat contact housing		X	
		for single wiring:	000 979 133	X	1,0
			000 979 133 A	X	1,0
			000 979 217	X	2,5
4	211 905 327	flat contact housing		X	
		for single wiring:	000 979 133	X	1,0
			000 979 133 A	X	1,0
			000 979 217	X	2,5
6	321 906 231	terminal pin housing		X	
		for single wiring:	000 979 106	X	1,0
			000 979 107	X	1,0
			000 979 204	X	2,5
			000 979 402	X	6,0
7	893 906 231	terminal pin housing		X	
		for single wiring:	000 979 107	X	1,0
			000 979 204	X	2,5
			000 979 402	X	6,0
8	191 906 231 B	flat contact housing		X	
		for single wiring:	000 979 133	X	1,0
			000 979 133 A	X	1,0
			000 979 217	X	2,5
9	311 906 231 B	terminal pin housing		X	
		for single wiring:	000 979 105	X	1,0
			000 979 106	X	1,0
10	893 906 232	terminal pin housing	3 pin	X	
		for single wiring:	000 979 135	X	1,0
			000 979 227	X	2,5
			000 979 407	X	6,0
11	022 906 233 B	flat contact housing		X	
		for single wiring:	000 979 133	X	1,0
			000 979 133 A	X	1,0
			000 979 217	X	2,5
(11)	1H0 973 703	flat contact housing	3 pin	1	
		for single wiring:	000 979 126	X	1,0

Pos	Part Number	Name	Remarks	Qty	Model
13	443 906 236	flat contact housing		X	
		for single wiring:	000 979 133	X	1,0
			000 979 133 A	X	1,0
			000 979 217	X	2,5
14	191 919 321	flat contact housing		X	
		see illustration:	972-12		
		for single wiring:	000 979 135	X	1,0
			000 979 227	X	2,5
			000 979 407	X	6,0
15	431 919 993	terminal pin housing		X	
		for single wiring:	000 979 107	X	1,0
			000 979 204	X	2,5
			000 979 402	X	6,0
16	171 927 235	terminal pin housing		X	
		for single wiring:	000 979 107	X	1,0
			000 979 204	X	2,5
			000 979 402	X	6,0
17	161 941 165	terminal pin housing		X	
		for single wiring:	000 979 206	X	2,5
18	161 941 165 A	terminal pin housing		X	
		for single wiring:	000 979 205	X	2,5
19	165 941 165	flat contact housing		X	
		for single wiring:	000 979 133	X	1,0
			000 979 133 A	X	1,0
			000 979 217	X	2,5
20	161 941 767	terminal pin housing		X	
		for single wiring:	000 979 107	X	1,0
			000 979 204	X	2,5
			000 979 402	X	6,0
21	113 945 525	terminal pin housing		X	
		for single wiring:	000 979 107	X	1,0
			000 979 204	X	2,5
			000 979 402	X	6,0
22	443 959 840	flat contact housing		X	
		for single wiring:	000 979 135	X	1,0
			000 979 227	X	2,5
			000 979 407	X	6,0
23	443 971 920	rd. connector sleeve housing with grommet		X	
		for single wiring:	000 979 117	X	1,0
			000 979 213	X	2,5
24	191 971 835	terminal pin housing		X	
		for single wiring:	000 979 105	X	1,0
			000 979 106	X	1,0
25	321 971 970	terminal pin housing		X	
		for single wiring:	000 979 107	X	1,0
			000 979 204	X	2,5
			000 979 402	X	6,0
26	431 971 970	terminal pin housing		X	
		for single wiring:	000 979 107	X	1,0
			000 979 204	X	2,5
			000 979 402	X	6,0
27	811 971 975	terminal pin housing		X	
		for single wiring:	000 979 106	X	1,0
			000 979 212	X	2,5
			000 979 405	X	6,0
28	--- --- ---	no longer available			
29	443 971 985	terminal pin housing		X	
		for single wiring:	000 979 106	X	1,0
			000 979 212	X	2,5
			000 979 405	X	6,0
29	443 971 985	terminal pin housing		X	
		for single wiring:	000 979 106	X	1,0
			000 979 212	X	2,5
			000 979 405	X	6,0
30	443 972 993	terminal pin housing		X	
		for single wiring:	000 979 106	X	1,0
			000 979 212	X	2,5
			000 979 405	X	6,0
31	321 945 248	flat contact housing		X	
		for single wiring:	000 979 135	X	1,0
			000 979 227	X	2,5
			000 979 407	X	6,0
32	1H0 972 703	flat contact housing		X	
		for single wiring:	000 979 133	X	1,0
			000 979 133 A	X	1,0
			000 979 217	X	2,5
33	1H0 972 117 A	flat contact housing with gasket	3 pin	X	
		for single wiring:	000 979 002	X	0,5
34	701 973 203	flat contact housing		X	
		for single wiring:	000 979 133	X	1,0
			000 979 133 A	X	1,0
			000 979 217	X	2,5
			000 979 406	X	6,0

Pos	Part Number	Name	Remarks	Qty	Model
35	701 973 203 A	flat contact housing		X	
		for single wiring:	000 979 133	X	1,0
			000 979 133 A	X	1,0
			000 979 217	X	2,5
			000 979 406	X	6,0

Pos	Part Number	Name	Remarks	Qty	Model

Model	Year	MG	SG	Illustration	VIN No.	Update	14:38	18.02.20100	ETKA
EL	90	9	71	970-31		336			

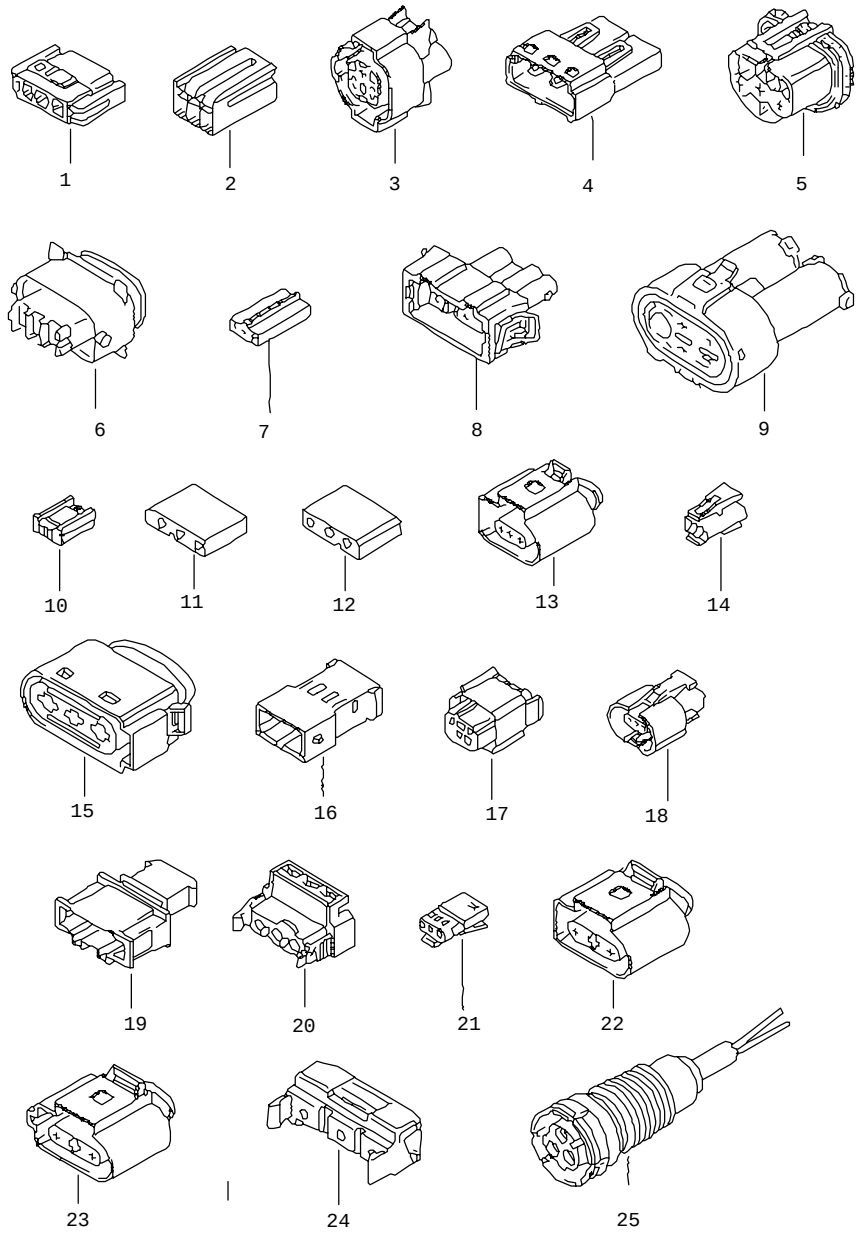

Pos	Part Number	Name	Remarks	Qty	Model
		connector housing	3 pin		
1	4A0 971 633	rd. connector sleeve housing		X	
		for single wiring:	000 979 117	X	1,0
			000 979 213	X	2,5
2	7M0 906 233 C	flat contact housing	3 pin	1	
3	1H0 973 203	flat contact housing		X	
		for single wiring:	000 979 133	X	1,0
			000 979 133 A	X	1,0
			000 979 217	X	2,5
			000 979 406	X	6,0
4	701 937 541	cable connector	3 point	X	
5	1E0 941 165	flat contact housing	3 pin	1	
		for single wiring:	000 979 126	X	1,0
			000 979 217	X	2,5
6	4D0 906 232	flat contact housing	3 pin	1	
		for single wiring:	000 979 135	X	1,0
			000 979 227	X	2,5
7	3A0 972 703 H	flat contact housing	3 pin	X	
		for single wiring:	000 979 131	X	1,0
8	357 972 754 H	flat contact housing		X	
		for single wiring:	000 979 133	X	1,0
			000 979 133 A	X	1,0
			000 979 217	X	2,5
9	1H0 973 204 A	flat contact housing	3 pin	X	
		for single wiring:	000 979 135	X	1,0
			000 979 227	X	2,5
			000 979 406	X	6,0
			000 979 407	X	6,0
10	4D0 971 989	terminal pin housing	3 pin	X	
		for single wiring:	000 979 002	X	0,5
11	8D0 971 701	terminal pin housing	3 pin grey	X	
		for single wiring:	000 979 105	X	1,0
12	1H0 971 701	terminal pin housing	3 pin green	X	
		for single wiring:	000 979 105	X	1,0
13	1J0 973 703	flat contact housing with helper contact catch	3 pin	1	
		for single wiring:	000 979 131	X	1,0
			000 979 131 A	X	1,0
14	357 973 119	flat contact housing	3 pin	1	
		for single wiring:	000 979 002	X	0,5

Pos	Part Number	Name	Remarks	Qty	Model
15	1J0 937 773	flat contact housing	3 pin	1	
		for single wiring:	000 979 135	X	1,0
			000 979 227	X	2,5
			000 979 306	X	4,0
			000 979 407	X	6,0
16	4B0 971 993	flat connector housing	3 pin	1	
		for single wiring:	000 979 134	X	1,0
			000 979 134 A	X	1,0
			000 979 226	X	2,5
			000 979 226 A	X	2,5
17	1J0 972 483 A	terminal pin housing	3 pin	1	
		for single wiring:	000 979 009	X	0,5
18	1J0 973 117 D	flat contact housing	3 pin	1	
		for single wiring:	000 979 003 A	X	0,5
19	191 972 713	flat connector housing	3 pin	1	
20	2D0 971 989 CE	flat connector housing	3 pin	1	
21	1J0 973 115	flat contact housing	3 pin	X	
		for single wiring:	000 979 003A	X	0,5
22	1J0 973 723	flat contact housing	3 pin	1	
			black		
		for single wiring:	000 979 133	X	1,0
			000 979 133 A	X	1,0
			000 979 133 AB	X	1,0
			000 979 225	X	2,5
			000 979 225 A	X	2,5
23	1J0 973 723 G	flat contact housing	3 pin	1	
			grey		
		for single wiring:	000 979 133	X	1,0
			000 979 133 A	X	1,0
			000 979 133 AB	X	1,0
			000 979 225	X	2,5
			000 979 225 A	X	2,5
24	2D0 971 989 CT	flat contact housing	3 pin	1	
		connecting piece			
		micro switch			
		selector lever			
		for contact:	2D0 972 982 A		
25	2D0 971 989 S	flat contact housing	3 pin	1	
-	8D0 971 969	round connector housing	3 pin	X	
		airbag	orange		
		for single wiring:	000 979 015 A	X	

Pos	Part Number	Name	Remarks	Qty	Model

Pos	Part Number	Name	Remarks	Qty	Model
		connector housing	3 pin		
-	8N0 971 955	flat contact housing	3 pin	X	
		for single wiring:	000 979 141	X	

Model	Year	MG	SG	Illustration	VIN No.	Update	14:39	18.02.20100	ETKA
EL	90	9	71	970-40		336			

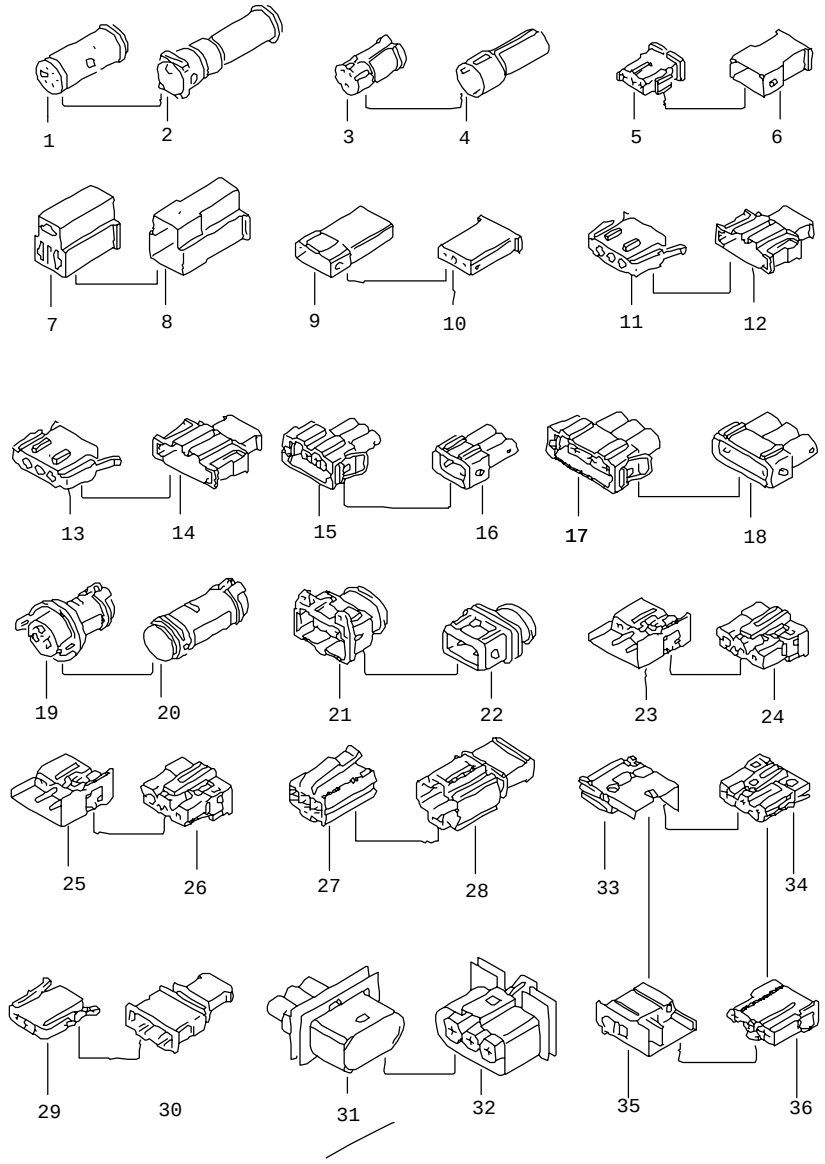

Pos	Part Number	Name	Remarks	Qty	Model
		connector housing	3 pin		
1	171 906 232 A	rd. connector sleeve housing		X	
		for single wiring:	000 979 108	X	1,0
			000 979 208	X	2,5
2	171 906 234 A	round connector housing		X	
		for single wiring:	000 979 109	X	1,0
			000 979 209	X	2,5
3	113 919 111	rd. connector sleeve housing		X	
		for single wiring:	000 979 108	X	1,0
			000 979 208	X	2,5
4	113 919 113	round connector housing		X	
		for single wiring:	000 979 109	X	1,0
			000 979 209	X	2,5
5	893 971 633	flat contact housing		X	
		for single wiring:	000 979 133	X	1,0
			000 979 133 A	X	1,0
			000 979 217	X	2,5
6	893 971 993	flat connector housing		X	
		for single wiring:	000 979 103	X	1,0
7	161 971 970	terminal pin housing		X	
		for single wiring:	000 979 107	X	1,0
			000 979 204	X	2,5
			000 979 402	X	6,0
8	161 971 975	flat connector housing		X	
		for single wiring:	000 979 104	X	1,0
			000 979 203	X	2,5
			000 979 409	X	6,0
9	171 971 998 B	round connector housing		X	
		for single wiring:	000 979 109	X	1,0
			000 979 209	X	2,5
10	171 971 999 B	rd. connector sleeve housing		X	
		for single wiring:	000 979 108	X	1,0
			000 979 208	X	2,5
11	1J0 972 703	flat contact housing	3 pin	1	
		for single wiring:	000 979 133	X	1,0
			000 979 133 A	X	1,0
			000 979 133 AB	X	1,0
			000 979 225	X	2,5
			000 979 225A	X	2,5
12	191 972 713	flat connector housing		X	
		for single wiring:	000 979 129	X	1,0
			000 979 219	X	2,5

Pos	Part Number	Name	Remarks	Qty	Model
13	1J0 972 753	flat contact housing	3 pin	1	
		for single wiring:	000 979 135	X	1,0
			000 979 227	X	2,5
			000 979 306	X	4,0
			000 979 407	X	6,0
14	191 972 763	flat contact housing		X	
		for single wiring:	000 979 130	X	1,0
			000 979 219	X	2,5
			000 979 302	X	4,0
15	357 972 753	flat contact housing		X	
		for single wiring:	000 979 133	X	1,0
			000 979 133 A	X	1,0
			000 979 217	X	2,5
(15)	1J0 973 703	flat contact housing with helper contact catch	3 pin black	1	
		for single wiring:	000 979 131	X	
			000 979 131 A	X	
(16)	1J0 973 803	flat contact housing with helper contact catch	3 pin black	1	
		for single wiring:	000 979 132	X	
			000 979 132 A	X	
16	357 972 763	flat connector housing		X	
		for single wiring:	000 979 129	X	1,0
			000 979 219	X	2,5
17	1H0 906 233	flat contact housing	3 pin	1	
		for single wiring:	000 979 135	X	1,0
			000 979 217	X	2,5
			000 979 227	X	2,5
			000 979 407	X	6,0
18	357 972 783	flat connector housing		X	
		for single wiring:	000 979 130	X	1,0
			000 979 219	X	2,5
			000 979 302	X	4,0
19	813 972 927	flat contact housing with helper contact catch and grommet		X	
		for single wiring:	000 979 135	X	1,0
			000 979 227	X	2,5
			000 979 407	X	6,0
20	813 972 928	flat contact housing with helper contact catch and grommet		X	
		for single wiring:	000 979 104	X	1,0
			000 979 203	X	2,5
			000 979 409	X	6,0

Pos	Part Number	Name	Remarks	Qty	Model
21	443 906 233	flat contact housing		X	
		for single wiring:	000 979 133	X	1,0
			000 979 133 A	X	1,0
			000 979 217	X	2,5
22	443 906 247	flat connector housing		X	
		for single wiring:	000 979 129	X	1,0
			000 979 219	X	2,5
23	4A0 972 241	round connector housing	black/pink	X	
		for single wiring:	000 979 118	X	1,0
			000 979 119	X	1,0
			000 979 215	X	2,5
			000 979 216	X	2,5
24	4A0 972 242	rd. connector sleeve housing	black/pink	X	
		for single wiring:	000 979 117	X	1,0
			000 979 120	X	1,0
			000 979 213	X	2,5
			000 979 214	X	2,5
25	4A0 972 243	round connector housing	black/blue	X	
		for single wiring:	000 979 118	X	1,0
			000 979 119	X	1,0
			000 979 215	X	2,5
			000 979 216	X	2,5
26	4A0 972 244	rd. connector sleeve housing	black/blue	X	
		for single wiring:	000 979 117	X	1,0
			000 979 120	X	1,0
			000 979 213	X	2,5
			000 979 214	X	2,5
27	191 919 321	flat contact housing		X	
		for single wiring:	000 979 135	X	1,0
			000 979 227	X	2,5
			000 979 407	X	6,0
28	357 919 321	flat contact housing	3 pin	1	
		for single wiring:	000 979 130	X	1,0
			000 979 219	X	2,5
29	3B0 972 703	flat contact housing with helper contact catch	3 pin	1	
		for single wiring:	000 979 131	X	1,0
			000 979 131 A	X	1,0
		GEGENSTUECK:	3B0 972 713	X	
(29)	535 972 703	flat contact housing		X	
		for single wiring:	000 979 131	X	1,0
			000 979 131 A	X	1,0
30	535 972 713	flat contact housing	3 pin	1	
		for single wiring:	000 979 132	X	1,0

Pos	Part Number	Name	Remarks	Qty	Model
31	1J0 906 233	flat contact housing	3 pin	1	
		for contact:	000 979 131	X	1,0
			000 979 227	X	
32	1J0 906 443	flat contact housing	3 pin	1	
		for single wiring:	000 979 228	X	2,5
			000 979 307	X	4,0
33	1J0 937 723	flat contact housing with	3 pin	X	
		helper contact catch	black		
		to be used for:	green		
			violet		
		as required use:	1J0 937 724		
		for single wiring:	000 979 134	X	1,0
			000 979 134 A	X	1,0
			000 979 136	X	1,0
			000 979 226	X	2,5
			000 979 226 A	X	2,5
			000 979 228	X	2,5
			000 979 307	X	4,0
(33)	1J0 937 723 A	flat contact housing with	3 pin	X	
		helper contact catch	brown		
		to be used for:	grey		
			light green		
		as required use:	1J0 937 724 A		
		for single wiring:	000 979 134	X	1,0
			000 979 134 A	X	1,0
			000 979 136	X	1,0
			000 979 226	X	2,5
			000 979 226 A	X	2,5
			000 979 228	X	2,5
			000 979 307	X	4,0

Pos	Part Number	Name	Remarks	Qty	Model
(33)	1J0 937 723 B	flat contact housing with	3 pin	X	
		helper contact catch	red		
		to be used for:	white		
			khaki grey		
		BEI BEDARF MITVERWENDEN:	1J0 937 724 B		
		FUER EINZELLEITUNG:	000 979 134	X	1,0
			000 979 134 A	X	1,0
			000 979 136	X	1,0
			000 979 226	X	2,5
			000 979 226 A	X	2,5
			000 979 228	X	2,5
			000 979 307	X	4,0
(33)	1J0 937 723 D	flat contact housing with	3 pin	X	
		helper contact catch	blue		
		to be used for:	dark brown		
			light pink		
			orange		
		BEI BEDARF MITVERWENDEN:	1J0 937 724 D		
		FUER EINZELLEITUNG:	000 979 134	X	1,0
			000 979 134 A	X	1,0
			000 979 136	X	1,0
			000 979 226	X	2,5
			000 979 226 A	X	2,5
			000 979 228	X	2,5
			000 979 307	X	4,0
34	1J0 937 713	flat contact housing with	3 pin	1	
		helper contact catch	black		
		to be used for:	green		

Pos	Part Number	Name	Remarks	Qty	Model
			violet		
		as required use:	1J0 937 714	1	
		for single wiring:	000 979 133	X	1,0
			000 979 133 A	X	1,0
			000 979 135	X	1,0
			000 979 225	X	2,5
			000 979 225 A	X	2,5
			000 979 227	X	2,5
			000 979 306	X	4,0
(34)	1J0 937 713 A	flat contact housing with	3 pin	1	
		helper contact catch	brown		
		to be used for:	grey		
			light green		
		as required use:	1J0 937 714 A	1	
		for single wiring:	000 979 133	X	1,0
			000 979 133 A	X	1,0
			000 979 135	X	1,0
			000 979 225	X	2,5
			000 979 225 A	X	2,5
			000 979 227	X	2,5
			000 979 306	X	4,0
(34)	1J0 937 713 B	flat contact housing with	3 pin	X	
		helper contact catch	red		
		to be used for:	white		
			khaki grey		
		as required use:	1J0 937 714 B	1	
		FUER EINZELLEITUNG:	000 979 133	X	1,0
			000 979 133 A	X	1,0
			000 979 135	X	1,0
			000 979 225	X	2,5
			000 979 225 A	X	2,5
			000 979 227	X	2,5
			000 979 306	X	4,0
(34)	1J0 937 713 D	flat contact housing with	3 pin	1	
		helper contact catch	blue		
		to be used for:	dark brown		
			light pink		
			orange		
		as required use:	1J0 937 714 D	1	
		for single wiring:	000 979 133	X	1,0
			000 979 133 A	X	1,0
			000 979 135	X	1,0
			000 979 225	X	2,5
			000 979 225 A	X	2,5
			000 979 227	X	2,5
			000 979 306	X	4,0
35	1J0 937 724	flat contact housing with	3 pin	X	
		helper contact catch	black		
		to be used for:	green		
			violet		
		as required use:	1J0 937 723		
		for single wiring:	000 979 134	X	1,0
			000 979 134 A	X	1,0
			000 979 136	X	1,0
			000 979 226	X	2,5
			000 979 226 A	X	2,5

Pos	Part Number	Name	Remarks	Qty	Model
			000 979 228	X	2,5
			000 979 307	X	4,0
(35)	1J0 937 724 A	flat contact housing with	3 pin	X	
		helper contact catch	brown		
		to be used for:	grey		
			light green		
		as required use:	1J0 937 723 A		
		for single wiring:	000 979 134	X	1,0
			000 979 134 A	X	1,0
			000 979 136	X	1,0
			000 979 226	X	2,5
			000 979 226 A	X	2,5
			000 979 228	X	2,5
			000 979 307	X	4,0
(35)	1J0 937 724 B	flat contact housing with	3 pin	X	
		helper contact catch	red		
		to be used for:	white		
			khaki grey		
		BEI BEDARF MITVERWENDEN:	1J0 937 723 B		
		FUER EINZELLEITUNG:	000 979 134	X	1,0
			000 979 134 A	X	1,0
			000 979 136	X	1,0
			000 979 226	X	2,5
			000 979 226 A	X	2,5
			000 979 228	X	2,5
			000 979 307	X	4,0
(35)	1J0 937 724 D	flat contact housing with	3 pin	X	
		helper contact catch	blue		
		to be used for:	dark brown		
			light pink		
			orange		
		BEI BEDARF MITVERWENDEN:	1J0 937 723 D		
		FUER EINZELLEITUNG:	000 979 134	X	1,0
			000 979 134 A	X	1,0
			000 979 136	X	1,0
			000 979 226	X	2,5
			000 979 226 A	X	2,5
			000 979 228	X	2,5
			000 979 307	X	4,0
36	1J0 937 714	flat contact housing with	3 pin	1	
		helper contact catch	black		
		to be used for:	green		
			violet		
		as required use:	1J0 937 713	1	
		for single wiring:	000 979 133	X	1,0
			000 979 133 A	X	1,0
			000 979 135	X	1,0
			000 979 225	X	2,5
			000 979 225 A	X	2,5
			000 979 227	X	2,5
			000 979 306	X	4,0
(36)	1J0 937 714 A	flat contact housing with	3 pin	1	
		helper contact catch	brown		
		to be used for:	grey		
			light green		
		as required use:	1J0 937 713 A	1	

Pos	Part Number	Name	Remarks	Qty	Model
		for single wiring:	000 979 133	X	1,0
			000 979 133 A	X	1,0
			000 979 135	X	1,0
			000 979 225	X	2,5
			000 979 225 A	X	2,5
			000 979 227	X	2,5
			000 979 306	X	4,0
(36)	1J0 937 714 B	flat contact housing with	3 pin	X	
		helper contact catch	red		
		to be used for:	white		
			khaki grey		
		as required use:	1J0 937 713 B	1	
		for single wiring:	000 979 133	X	1,0
			000 979 133 A	X	1,0
			000 979 135	X	1,0
			000 979 225	X	2,5
			000 979 225 A	X	2,5
			000 979 227	X	2,5
			000 979 306	X	4,0
(36)	1J0 937 714 D	flat contact housing with	3 pin	1	
		helper contact catch	blue		
		to be used for:	dark brown		
			light pink		
			orange		
		as required use:	1J0 937 713 D	1	
		for single wiring:	000 979 133	X	1,0
			000 979 133 A	X	1,0
			000 979 135	X	1,0

Pos	Part Number	Name	Remarks	Qty	Model
			000 979 225	X	2,5
			000 979 225 A	X	2,5
			000 979 227	X	2,5
			000 979 306	X	4,0

Model	Year	MG	SG	Illustration	VIN No.	Update	14:41	18.02.20100	ETKA
EL	90	9	71	970-50		336			

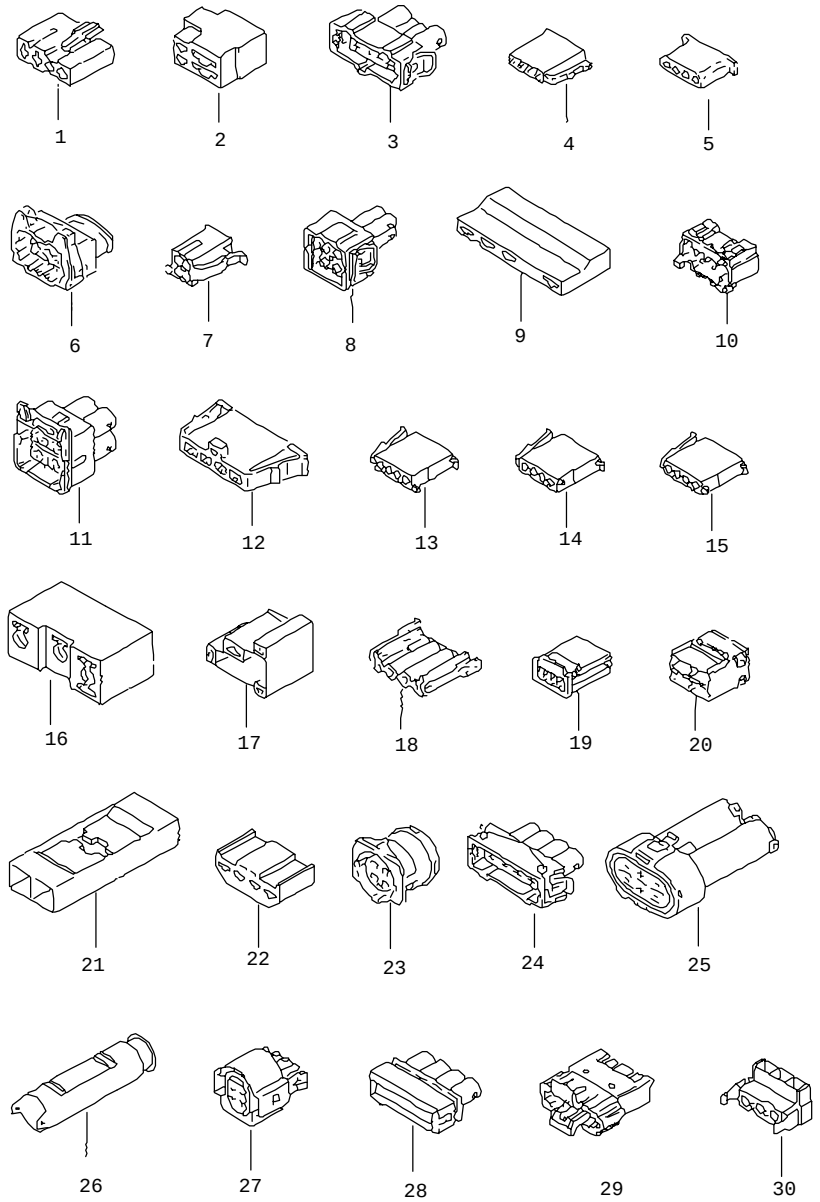

Pos	Part Number	Name	Remarks	Qty	Model
		connector housing	4 pin		
1	171 035 447 B	flat contact housing		X	
		for single wiring:	000 979 133	X	1,0
			000 979 133 A	X	1,0
			000 979 135	X	1,0
			000 979 217	X	2,5
			000 979 227	X	2,5
			000 979 407	X	6,0
2	823 905 897	terminal pin housing		X	
		for single wiring:	000 979 207	X	2,5
			000 979 304	X	4,0
3	357 906 231	flat contact housing		X	
		for single wiring:	000 979 133	X	1,0
			000 979 133 A	X	1,0
			000 979 135	X	1,0
			000 979 217	X	2,5
			000 979 227	X	2,5
			000 979 407	X	6,0
4	191 906 231 C	flat contact housing		X	
		for single wiring:	000 979 133	X	1,0
			000 979 133 A	X	1,0
			000 979 217	X	2,5
5	311 906 231 C	terminal pin housing		X	
		for single wiring:	000 979 105	X	1,0
6	4A0 906 234	flat contact housing		X	
		for single wiring:	000 979 133	X	1,0
			000 979 133 A	X	1,0
			000 979 217	X	2,5
7	357 907 968	terminal pin housing		X	
		for single wiring:	000 979 133	X	1,0
			000 979 133 A	X	1,0
			000 979 217	X	2,5
8	357 919 754	flat contact housing		X	
		for single wiring:	000 979 133	X	1,0
			000 979 133 A	X	1,0
			000 979 217	X	2,5
9	867 919 993	terminal pin housing		X	
		for single wiring:	000 979 107	X	1,0
			000 979 204	X	2,5
			000 979 402	X	6,0
10	357 937 517	junction box		X	
11	357 941 165	flat contact housing		X	
		for single wiring:	000 979 135	X	1,0
			000 979 227	X	2,5
			000 979 407	X	6,0

Pos	Part Number	Name	Remarks	Qty	Model
12	321 945 249	flat contact housing		X	
		for single wiring:	000 979 135	X	1,0
			000 979 227	X	2,5
			000 979 407	X	6,0
13	1H0 953 633 A	flat contact housing		X	
		for single wiring:	000 979 133	X	1,0
			000 979 133 A	X	1,0
			000 979 217	X	2,5
14	1H0 953 634	flat contact housing		X	
		for single wiring:	000 979 133	X	1,0
			000 979 133 A	X	1,0
			000 979 217	X	2,5
15	1H0 953 634 A	flat contact housing		X	
		for single wiring:	000 979 133	X	1,0
			000 979 133 A	X	1,0
			000 979 217	X	2,5
16	251 963 253	terminal pin housing		X	
		for single wiring:	000 979 107	X	1,0
			000 979 204	X	2,5
			000 979 402	X	6,0
17	321 971 837	terminal pin housing		X	
		for single wiring:	000 979 106	X	1,0
			000 979 107	X	1,0
			000 979 204	X	2,5
			000 979 402	X	6,0
18	171 971 997	rd. connector sleeve housing		X	
		for single wiring:	000 979 108	X	1,0
			000 979 110	X	1,0
			000 979 208	X	2,5
			000 979 211	X	2,5
			000 979 305	X	4,0
19	861 971 998 A	spring contact housing		X	
		for single wiring:	000 979 102	X	1,0
20	447 972 957	terminal pin housing		X	
		for single wiring:	000 979 106	X	1,0
			000 979 212	X	2,5
			000 979 405	X	6,0
21	893 971 827	cable connector		X	
22	--- --- ---	no longer available			
23	4A0 971 966	rd. connector sleeve housing		X	
		for single wiring:	000 979 117	X	1,0
			000 979 120	X	1,0
			000 979 213	X	2,5
			000 979 214	X	2,5

Pos	Part Number	Name	Remarks	Qty	Model
24	357 972 774	flat contact housing		X	
		for single wiring:	000 979 135	X	1,0
			000 979 227	X	2,5
			000 979 407	X	6,0
25	1H0 973 204	flat contact housing		X	
		for single wiring:	000 979 135	X	1,0
			000 979 227	X	2,5
			000 979 406	X	6,0
			000 979 407	X	6,0
26	2D0 971 989 CF	flat contact housing	4 pin	1	
		connecting piece			
		lambda probe			
		for single wiring:	000 979 139	X	1,0
27	1H0 973 734	flat contact housing		X	
		for single wiring:	000 979 133	X	1,0
			000 979 133 A	X	1,0
			000 979 217	X	2,5
27	1H0 973 734	flat contact housing		X	
		for single wiring:	000 979 133	X	1,0
			000 979 133 A	X	1,0
			000 979 217	X	2,5
28	357 972 784	flat connector housing		X	
		for single wiring:	000 979 130	X	1,0
			000 979 219	X	2,5
29	443 971 969 A	flat connector housing	4 pin	X	
		for single wiring:	000 979 204	X	2,5
			000 979 402	X	6,0
30	2D0 971 989 CE	flat connector housing	3 pin	1	
		for contact:	2D0 972 982 F	X	

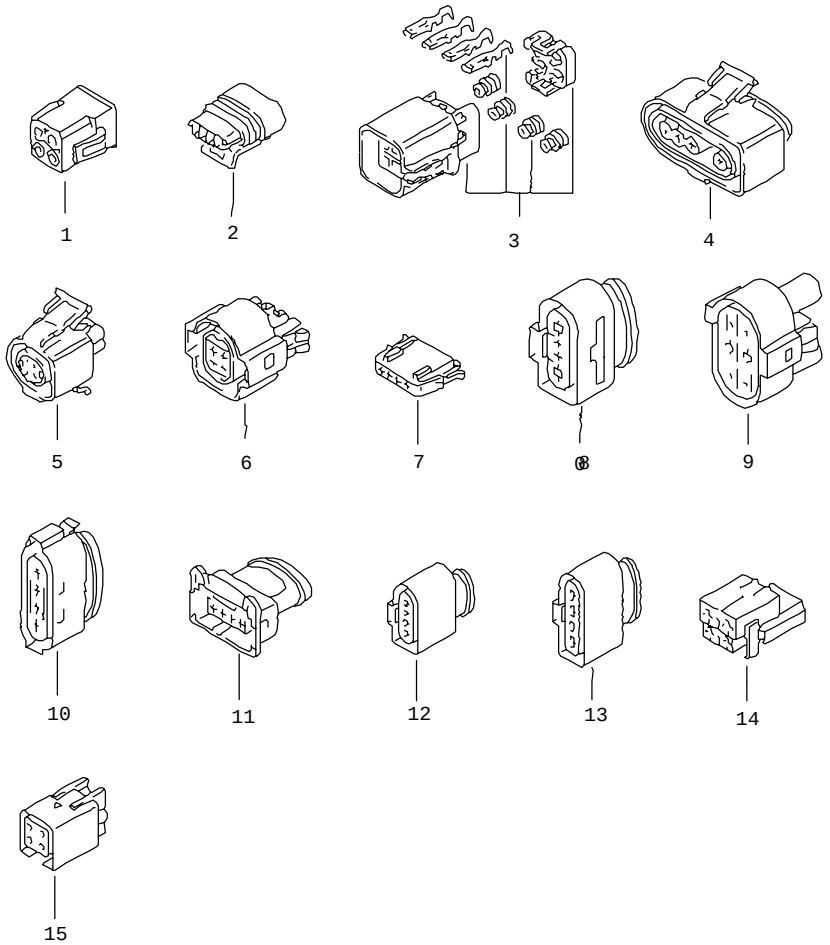

Pos	Part Number	Name	Remarks	Qty	Model
		connector housing	4 pin		
1	4A0 971 943	rd. connector sleeve housing	4 pin	1	
		for single wiring:	000 979 117	X	1,0
			000 979 213	X	2,5
2	8A0 971 974 A	1 set of connectors connecting piece motor for adjustment idling stabilsation	4 pin	1	
3	4A0 972 929	1 set of connectors (catalyst-control)	4 pin	1	"J.."
4	3A0 973 204	flat contact housing connecting piece lambda probe	4 pin black II left	1	
		for single wiring:	000 979 126	X	1,0
			000 979 126A	X	1,0
5	3A0 973 712	flat contact housing	4 pin	X	
		for single wiring:	000 979 131	X	1,0
			000 979 131 A	X	1,0
6	1H0 973 734 A	flat contact housing	4 pin	1	
		for single wiring:	000 979 133	X	1,0
			000 979 133 A	X	1,0
			000 979 217	X	2,5
7	535 972 704	flat contact housing	4 pin	1	
		for single wiring:	000 979 219	X	1,0
8	1J0 919 231	flat contact housing	4 pin	X	
		connecting piece			
		fuel gauge			
		sender			
		for single wiring:	000 979 133	X	1,0
			000 979 135	X	1,0
			000 979 225	X	2,5
			000 979 227	X	2,5
			000 979 306	X	4,0
			000 979 407	X	6,0
9	1J0 906 234	flat contact housing	4 pin	1	
		for single wiring:	000 979 227	X	2,5
			000 979 412	X	6,0

Pos	Part Number	Name	Remarks	Qty	Model
10	6N0 937 774	flat contact housing	4 pin	1	
		for single wiring:	000 979 135	X	1,0
			000 979 227	X	2,5
11	1H0 973 704	flat contact housing	4 pin	1	
		for single wiring:	000 979 126	X	1,0
12	1J0 973 704	flat contact housing with helper contact catch	4 pin	1	
		for single wiring:	000 979 131	X	1,0
			000 979 131 A	X	1,0
13	1J0 973 724 A	flat contact housing	4 pin brown	1	
		for single wiring:	000 979 133	X	1,0
			000 979 133 A	X	1,0
			000 979 225	X	2,5
			000 979 225 A	X	2,5
(13)	4B0 973 724	flat contact housing with helper contact catch	4 pin black	1	
		for single wiring:	000 979 016	X	0,5
			000 979 141	X	1,0
			000 979 237	X	2,5
14	3B0 959 743	flat contact housing with helper contact catch	4 pin black	X	
		for single wiring:	000 979 225	X	2,5
			000 979 225 A	X	2,5
15	7M0 906 234 D	rd. connector sleeve housing	4 pin	1	
		for single wiring:	000 979 148	X	
			000 979 240	X	

Pos	Part Number	Name	Remarks	Qty	Model

Model	Year	MG	SG	Illustration	VIN No.	Update	14:42	18.02.20100	ETKA
EL	90	9	71	970-60		336			

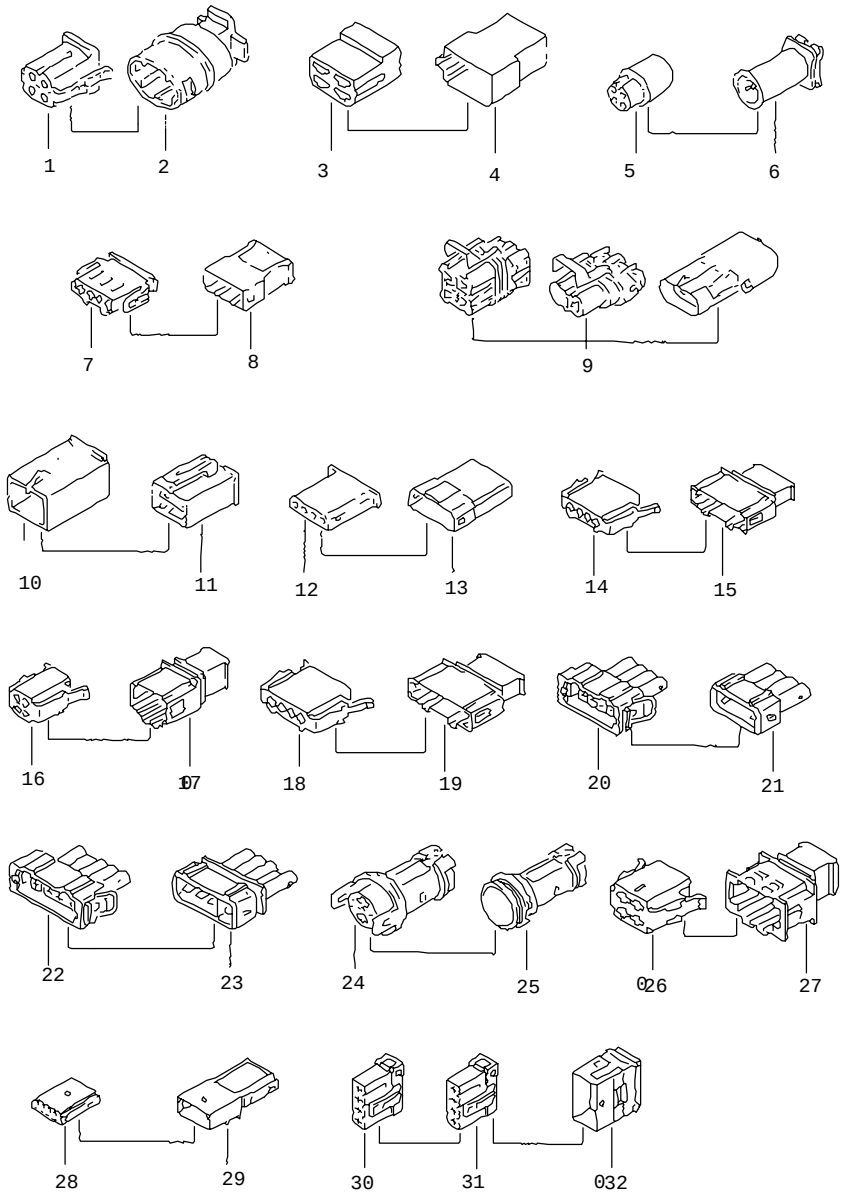

Pos	Part Number	Name	Remarks	Qty	Model
		connector housing	4 pin		
1	191 905 897	rd. connector sleeve housing		X	
		for single wiring:	000 979 110	X	1,0
			000 979 211	X	2,5
			000 979 305	X	4,0
2	191 905 899	round connector housing		X	
		for single wiring:	000 979 111	X	1,0
			000 979 210	X	2,5
			000 979 304	X	4,0
(3)	803 905 897	terminal pin housing		X	
		for single wiring:	000 979 107	X	1,0
			000 979 204	X	2,5
			000 979 402	X	6,0
(3)	2D0 971 989 CK	flat contact housing	4 pin	1	
		connecting piece			
		for additional heater			
		for single wiring:	000 979 107	X	1,0
			000 979 204	X	2,5
			000 979 402	X	6,0
3	ZAB 971 838	terminal pin housing	4 pin	1	
		for single wiring:	000 979 107	X	1,0
			000 979 204	X	2,5
			000 979 402	X	6,0
4	803 905 899	flat connector housing		X	
		for single wiring:	000 979 104	X	1,0
			000 979 203	X	2,5
			000 979 409	X	6,0
5	411 963 253	rd. connector sleeve housing		X	
		for single wiring:	000 979 108	X	1,0
			000 979 208	X	2,5
6	411 963 025 A	round connector housing		X	
		for single wiring:	000 979 109	X	1,0
			000 979 209	X	2,5
7	893 971 634	flat contact housing		X	
		for single wiring:	000 979 133	X	1,0
			000 979 133 A	X	1,0
			000 979 217	X	2,5
8	893 971 994	flat connector housing		X	
		for single wiring:	000 979 103	X	1,0
(8)	4B0 971 994	flat connector housing	4 pin	1	
		for single wiring:	000 979 134	X	1,0
			000 979 134 A	X	1,0
			000 979 226	X	2,5
			000 979 226 A	X	2,5

Pos	Part Number	Name	Remarks	Qty	Model
9	443 971 973 A	1 set of connectors		X	air condit.
10	443 971 969	flat connector housing		X	
		for single wiring:	000 979 104	X	1,0
			000 979 203	X	2,5
			000 979 409	X	6,0
11	893 971 974	flat contact housing		X	
		for single wiring:	000 979 135	X	1,0
			000 979 227	X	2,5
			000 979 407	X	6,0
12	171 971 999 C	rd. connector sleeve housing		X	
		for single wiring:	000 979 108	X	1,0
			000 979 208	X	2,5
13	171 971 998 C	round connector housing		X	
		for single wiring:	000 979 109	X	1,0
			000 979 209	X	2,5
14	1J0 972 704	flat contact housing	4 pin	1	
		for single wiring:	000 979 133	X	1,0
			000 979 133 A	X	1,0
			000 979 225	X	2,5
			000 979 225 A	X	2,5
15	191 972 714	flat connector housing		X	
		for single wiring:	000 979 129	X	1,0
			000 979 219	X	2,5
16	1J0 972 722	terminal pin housing	4 pin	1	
		for single wiring:	000 979 133	X	1,0
			000 979 133 A	X	1,0
			000 979 225	X	2,5
			000 979 225 A	X	2,5
17	1J0 972 732	terminal pin housing	4 pin	1	
		for single wiring:	000 979 134	X	1,0
			000 979 134 A	X	1,0
			000 979 226	X	2,5
			000 979 226 A	X	2,5
		GEGENSTUECK:	1J0 972 722		
(17)	191 972 732	terminal pin housing		X	
		for single wiring:	000 979 129	X	1,0
			000 979 219	X	2,5
18	1J0 972 754	flat contact housing	4 pin	1	
		for single wiring:	000 979 135	3	1,0
			000 979 227	1	2,5
19		not a spare part		X	

Pos	Part Number	Name	Remarks	Qty	Model
20	357 972 754	flat contact housing		X	
		for single wiring:	000 979 133	X	1,0
			000 979 133 A	X	1,0
			000 979 217	X	2,5
(20)	357 972 754 H	flat contact housing	3 pin	1	
		for single wiring:	000 979 126	X	1,0
			000 979 217	X	2,5
21	357 972 764	flat connector housing		X	
		for single wiring:	000 979 129	X	1,0
			000 979 219	X	2,5
22	357 972 754 J	flat contact housing		X	
		for single wiring:	000 979 133	X	1,0
			000 979 133 A	X	1,0
			000 979 217	X	2,5
23	357 972 764 K	flat connector housing		X	
		for single wiring:	000 979 129	X	1,0
			000 979 219	X	2,5
24	813 972 929	flat contact housing with helper contact catch and grommet		X	
		for single wiring:	000 979 135	X	1,0
			000 979 227	X	2,5
			000 979 407	X	6,0
25	813 972 930	flat contact housing with helper contact catch and grommet		X	
		for single wiring:	000 979 104	X	1,0
			000 979 203	X	2,5
			000 979 409	X	6,0
26	1J0 972 772	flat contact housing	4 pin	1	
		for single wiring:	000 979 135	3	1,0
			000 979 227	1	2,5
(26)	191 972 772	flat contact housing		X	
		for single wiring:	000 979 135	X	1,0
			000 979 227	X	2,5
			000 979 407	X	6,0
27	1J0 972 782	flat contact housing	4 pin	1	
		for single wiring:	000 979 136	X	1,0
			000 979 228	X	2,5
(27)	191 972 782	flat contact housing		X	
		for single wiring:	000 979 130	X	1,0
			000 979 219	X	2,5
			000 979 302	X	4,0
28	4D0 972 623	rd. connector sleeve housing	4 pin	1	
		for single wiring:	000 979 003 A	X	0,5

Pos	Part Number	Name	Remarks	Qty	Model
29	4D0 972 643	round connector housing with contact lock	4 pin	1	
30	3B0 937 713	flat contact housing with helper contact catch	4 pin	1	
			black		
		as required use:	3B0 937 714	1	
		for single wiring:	000 979 131	X	1,0
			000 979 133	X	1,0
			000 979 133 A	X	1,0
(30)	3B0 937 713 A	flat contact housing with helper contact catch	4 pin	1	
			brown		
		as required use:	3B0 937 714 A	1	
		for single wiring:	000 979 131	X	1,0
			000 979 133	X	1,0
			000 979 133 A	X	1,0
31	3B0 937 714	flat contact housing with helper contact catch	4 pin	1	
			black		
		as required use:	3B0 937 713	1	
		for single wiring:	000 979 131	X	1,0
			000 979 133	X	1,0
			000 979 133 A	X	1,0
(31)	3B0 937 714 A	flat contact housing with helper contact catch	4 pin	1	
			brown		
		as required use:	3B0 937 713 A	1	
		for single wiring:	000 979 131	X	1,0
			000 979 133	X	1,0
			000 979 133 A	X	1,0
32	3B0 937 741	flat connector housing with additional contact catch	8 pin	1	
			black		
		for single wiring:	000 979 134	X	1,0
			000 979 134 A	X	1,0
			000 979 136	X	1,0
			000 979 216	X	2,5
			000 979 228	X	2,5

Pos	Part Number	Name	Remarks	Qty	Model

Model	Year	MG	SG	Illustration	VIN No.	Update				
EL	90	9	71	970-61		336	14:42	18.02.20100	ETKA	Audi

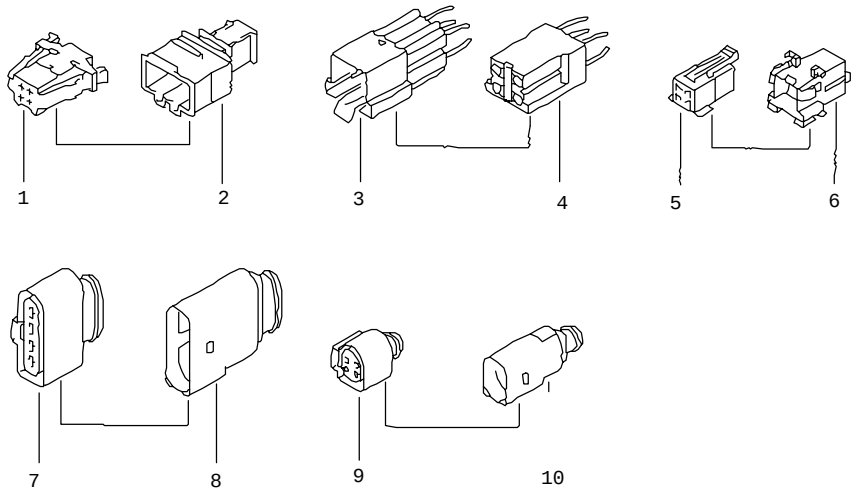

Pos	Part Number	Name	Remarks	Qty	Model
		connector housing	4 pin		
1	3B0 972 722	terminal pin housing	4 pin	1	
		for single wiring:	000 979 131	X	1,0
			000 979 131 A	X	1,0
(1)	535 972 722	flat contact housing	4 pin	1	
		for single wiring:	000 979 131	X	1,0
			000 979 131 A	X	1.0
2	3B0 972 732	flat contact housing	4 pin	1	
		for contact:	000 979 132	X	1,0
			000 979 132 A	X	1,0
(2)	535 972 732	flat contact housing	4 pin	1	
		for single wiring:	000 979 132	X	1,0
			000 979 132 A	X	1,0
3	2TA 973 104	round connector housing	4 pin	1	L 80
4	2TA 973 114	rd. connector sleeve housing	4 pin	1	L 80
5	2D0 971 989 AS	flat connector housing	4 pin	1	
		for single wiring:	000 979 133	X	1,0
			000 979 133 A	X	1,0
			000 979 225	X	2,5
			000 979 225 A	X	2,5
6	2D0 971 989 C	flat connector housing	4 pin	1	
		for single wiring:	000 979 134	X	1,0
			000 979 134 A	X	1,0
			000 979 226	X	2,5
			000 979 226 A	X	2,5
7	1J0 973 724	flat contact housing	4 pin	1	
			black		
		for single wiring:	000 979 133	X	1,0
			000 979 133 A	X	1,0
			000 979 225	X	2,5
			000 979 225 A	X	2,5
8	1J0 973 824	flat contact housing	4 pin	1	
		as required use:	357 972 841	2	
		for single wiring:	000 979 134	X	1,0
			000 979 134 A	X	1,0
			000 979 226	X	2,5
			000 979 226 A	X	2,5
9	4B0 973 712	flat contact housing with helper contact catch	4 pin	1	
		for single wiring:	000 979 131	X	1,0
			000 979 131 A	X	1,0

Pos	Part Number	Name	Remarks	Qty	Model
10	4B0 973 812	flat connector housing with additional contact catch	4 pin	X	
		for single wiring:	000 979 132	X	1,0
			000 979 132 A	X	1,0
-	1H0 973 204	flat contact housing	4 pin	1	
		for single wiring:	000 979 127	X	1,0
			000 979 218	X	2,5
			000 979 406	X	6,0
			000 979 407	X	6,0
-	7M0 973 334	flat contact housing	4 pin	1	
		for single wiring:	000 979 130	X	
			000 979 220	X	
			000 979 307	X	

Pos	Part Number	Name	Remarks	Qty	Model

Model	Year	MG	SG	Illustration	VIN No.	Update	14:43	18.02.20100	ETKA
EL	90	9	71	970-70		336			

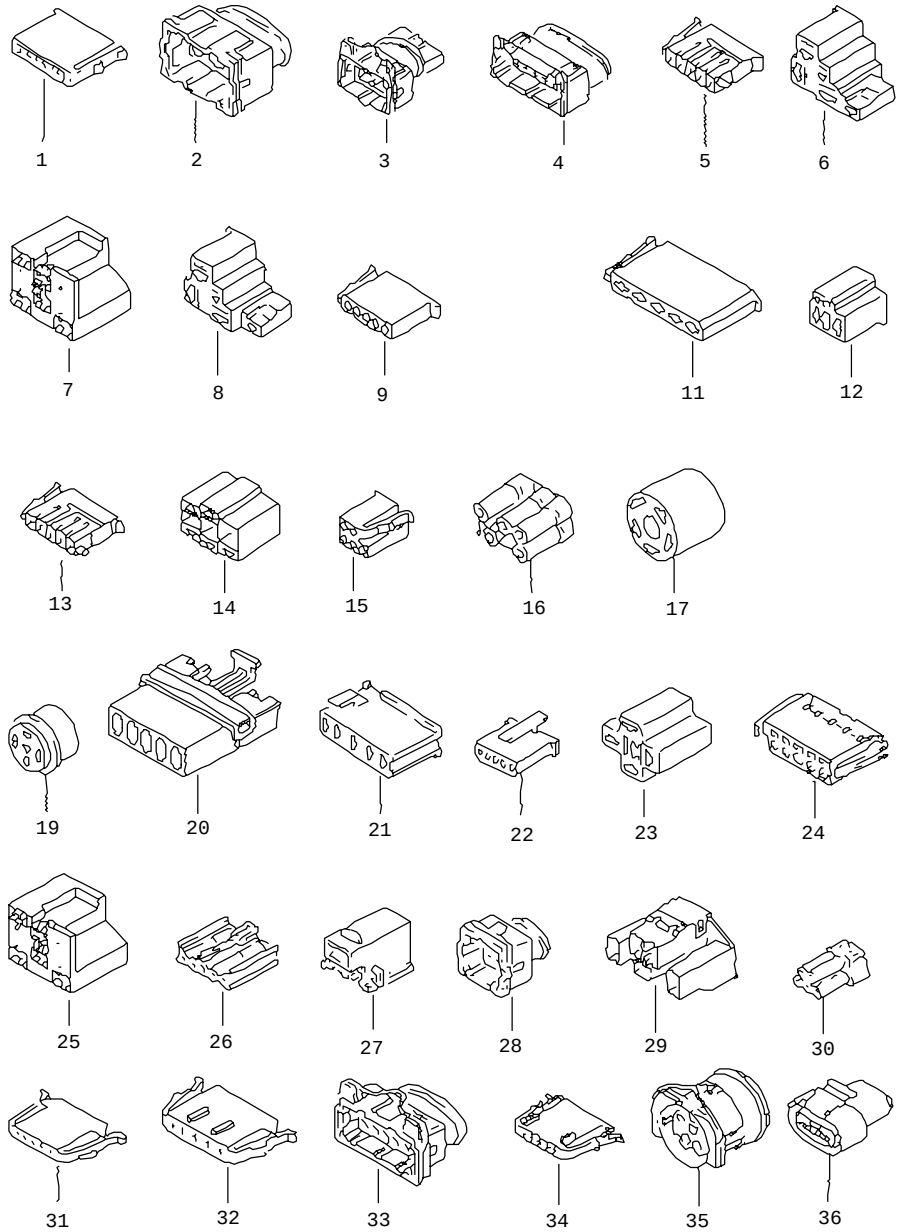

Pos	Part Number	Name	Remarks	Qty	Model
		connector housing	5 pin		
1	191 906 231 D	flat contact housing		X	
		for single wiring:	000 979 133	X	1,0
			000 979 133 A	X	1,0
			000 979 217	X	2,5
2	022 906 233	flat contact housing		X	
		for single wiring:	000 979 133	X	1,0
			000 979 133 A	X	1,0
			000 979 217	X	2,5
3	443 906 235	flat contact housing		X	
		for single wiring:	000 979 133	X	1,0
			000 979 133 A	X	1,0
			000 979 217	X	2,5
4	025 906 235 B	flat contact housing		X	
		for single wiring:	000 979 133	X	1,0
			000 979 133 A	X	1,0
			000 979 217	X	2,5
5	357 919 968 A	flat contact housing with helper contact catch		X	
		for single wiring:	000 979 133	X	1,0
			000 979 133 A	X	1,0
			000 979 217	X	2,5
6	171 941 599	terminal pin housing		X	
		for single wiring:	000 979 106	X	1,0
			000 979 107	X	1,0
			000 979 204	X	2,5
			000 979 402	X	6,0
7	357 941 599	flat contact housing	white	X	
		for single wiring:	000 979 135	X	1,0
			000 979 227	X	2,5
			000 979 407	X	6,0
8	431 941 599	terminal pin housing		X	
		for single wiring:	000 979 106	X	1,0
			000 979 107	X	1,0
			000 979 204	X	2,5
			000 979 402	X	6,0
9	1H0 953 635	flat contact housing		X	
		for single wiring:	000 979 133	X	1,0
			000 979 133 A	X	1,0
			000 979 217	X	2,5
10	--- --- ---	no longer available		X	
11	1H0 953 637	flat contact housing		X	
		for single wiring:	000 979 135	X	1,0
			000 979 227	X	2,5
			000 979 407	X	6,0

Pos	Part Number	Name	Remarks	Qty	Model
12	171 953 637 A	terminal pin housing		X	
		for single wiring:	000 979 106	X	1,0
			000 979 107	X	1,0
			000 979 204	X	2,5
			000 979 402	X	6,0
13	357 955 968 A	flat contact housing with helper contact catch		X	
		for single wiring:	000 979 133	X	1,0
			000 979 133 A	X	1,0
			000 979 217	X	2,5
14	321 959 869	terminal pin housing		X	
		for single wiring:	000 979 107	X	1,0
			000 979 204	X	2,5
			000 979 402	X	6,0
15	357 959 869	terminal pin housing		X	
		for single wiring:	000 979 133	X	1,0
			000 979 133 A	X	1,0
			000 979 217	X	2,5
16	431 959 869	rd. connector sleeve housing		X	
		for single wiring:	000 979 110	X	1,0
			000 979 211	X	2,5
			000 979 305	X	4,0
17	171 959 999	terminal pin housing		X	
		for single wiring:	000 979 107	X	1,0
			000 979 204	X	2,5
			000 979 402	X	6,0
18		see illustration:	972-20		
18		see illustration:	972-20		
19	113 971 835	terminal pin housing		X	
		for single wiring:	000 979 105	X	1,0
			000 979 106	X	1,0
20	--- --- ---	no longer available		X	
21	811 971 835	terminal pin housing		X	
		for single wiring:	000 979 107	X	1,0
			000 979 204	X	2,5
			000 979 402	X	6,0
22	171 971 835 A	terminal pin housing		X	
		for single wiring:	000 979 105	X	1,0
			000 979 106	X	1,0
23	803 971 835 A	terminal pin housing		X	
		for single wiring:	000 979 107	X	1,0
			000 979 204	X	2,5
			000 979 402	X	6,0

Pos	Part Number	Name	Remarks	Qty	Model
(23)	2TA 971 835	terminal pin housing	5 pin	1	L 80
24	443 971 836	flat contact housing		X	
		for single wiring:	000 979 135	X	1,0
			000 979 227	X	2,5
			000 979 407	X	6,0
25	357 971 837	flat contact housing	black	X	
		for single wiring:	000 979 135	X	1,0
			000 979 227	X	2,5
			000 979 407	X	6,0
26	171 971 997 A	rd. connector sleeve housing		X	
		for single wiring:	000 979 108	X	1,0
			000 979 110	X	1,0
			000 979 208	X	2,5
			000 979 211	X	2,5
			000 979 305	X	4,0
27	443 972 961	flat contact housing		X	
		for single wiring:	000 979 135	X	1,0
			000 979 227	X	2,5
			000 979 407	X	6,0
			000 979 408	X	6,0
28	191 972 995	flat contact housing		X	
		for single wiring:	000 979 133	X	1,0
			000 979 133 A	X	1,0
			000 979 217	X	2,5
29	443 972 995	flat connector housing		X	
		for single wiring:	000 979 106	X	1,0
			000 979 212	X	2,5
			000 979 405	X	6,0
30	447 972 995	rd. connector sleeve housing		X	
		for single wiring:	000 979 108	X	1,0
			000 979 208	X	2,5
31	1H4 972 705	flat contact housing		X	
		for single wiring:	000 979 131	X	1,0
			000 979 131 A	X	1,0
32	1H0 972 705	flat contact housing		X	
		for single wiring:	000 979 133	X	1,0
			000 979 133 A	X	1,0
			000 979 217	X	2,5
(32)	191 972 755	flat contact housing	5 pin	1	
		for single wiring:	000 979 135	X	1,0
			000 979 227	X	2,5
			000 979 306	X	4,0
			000 979 407	X	6,0

Pos	Part Number	Name	Remarks	Qty	Model
33	893 906 234	flat contact housing		X	
		for single wiring:	000 979 107	X	1,0
			000 979 204	X	2,5
			000 979 402	X	6,0
34	535 972 705	terminal pin housing		X	
		for single wiring:	000 979 131	X	1,0
			000 979 131 A	X	1,0
35	8D0 971 966	rd. connector sleeve housing	5 pin	1	
		for single wiring:	000 979 117	X	1,0
			000 979 214	X	2,5
36	4D0 971 977	flat contact housing	5 pin	1	
		for single wiring:	000 979 003 A	X	0,5

Pos	Part Number	Name	Remarks	Qty	Model

Model	Year	MG	SG	Illustration	VIN No.	Update	14:43	18.02.20100	ETKA
EL	90	9	71	970-71		336			

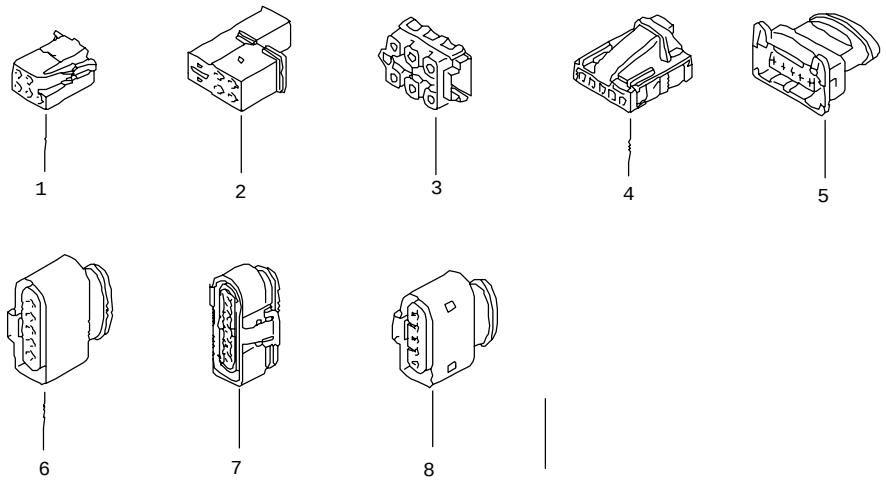

Pos	Part Number	Name	Remarks	Qty	Model
		connector housing	5 pin		
1	1J0 959 869	flat contact housing	5 pin	X	
		for single wiring:	000 979 133	X	
			000 979 133 A	X	
			000 979 135	X	
2	2D0 971 989 AP	flat connector housing	5 pin	1	
		connecting piece			
		fuse box/relay plate			
3	2D0 971 989 F	flat contact housing	5 pin	1	
4	4B0 973 605	flat contact housing	5 pin	1	
		for single wiring:	000 979 003 A	X	0,5
5	1H0 973 705	flat contact housing	5 pin	1	
		for single wiring:	000 979 126	X	1,0
6	4D0 973 725	flat contact housing	5 pin	1	
		ignition coil			
		for single wiring:	000 979 135	X	1,0
			000 979 133	X	1,0
			000 979 133 A	X	1,0
7	3A0 973 755	flat contact housing	5 pin	1	
		for single wiring:	000 979 407	X	6,0
8	1J0 973 775 A	flat contact housing with	5 pin	1	
		helper contact catch	SCHWARZ/ROT		
		for single wiring:	000 979 133	X	1,0
			000 979 133 A	X	1,0
			000 979 225	X	2,5
			000 979 225 A	X	2,5
-	6N0 937 775	flat contact housing	5 pin	1	
		for single wiring:	000 979 227	X	2,5
			000 979 306	X	4,0
-	4B0 971 995	flat connector housing	5 pin	1	
		KONTAKTE BERICHTIGT			

Model	Year	MG	SG	Illustration	VIN No.	Update	14:43	18.02.20100	ETKA
EL	90	9	71	970-80		336			

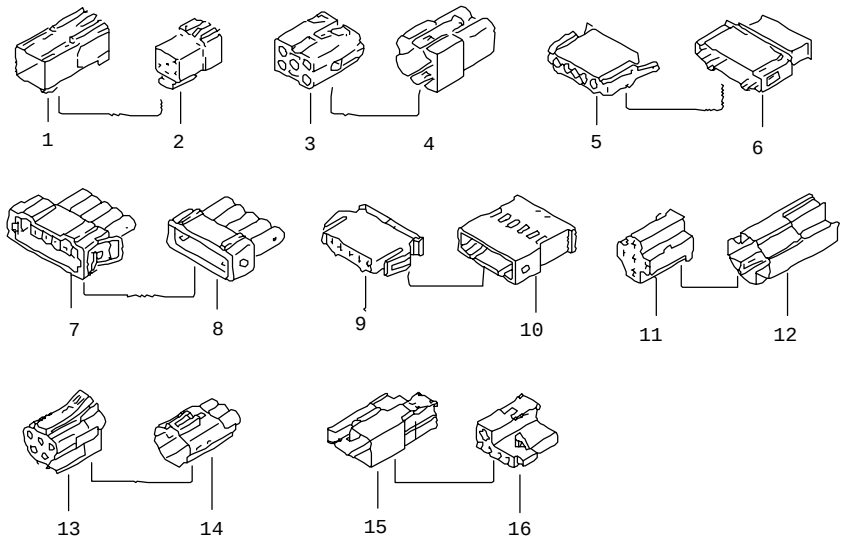

Pos	Part Number	Name	Remarks	Qty	Model
		connector housing	5 pin		
1	893 971 835	flat connector housing		X	
		for single wiring:	000 979 103	X	1,0
2	893 971 836	flat contact housing		X	
		for single wiring:	000 979 133	X	1,0
			000 979 133 A	X	1,0
			000 979 135	X	1,0
			000 979 217	X	2,5
3	533 972 523	rd. connector sleeve housing		X	
		for single wiring:	000 979 110	X	1,0
			000 979 211	X	2,5
			000 979 305	X	4,0
4	533 972 524	round connector housing		X	
		for single wiring:	000 979 111	X	1,0
			000 979 210	X	2,5
			000 979 304	X	4,0
5	191 972 705	terminal pin housing		X	
		for single wiring:	000 979 133	X	1,0
			000 979 133 A	X	1,0
			000 979 135	X	1,0
			000 979 217	X	2,5
6	191 972 715	flat connector housing		X	
		for single wiring:	000 979 129	X	1,0
			000 979 219	X	2,5
7	357 972 755	flat contact housing		X	
		for single wiring:	000 979 133	X	1,0
			000 979 133 A	X	1,0
			000 979 135	X	1,0
			000 979 217	X	2,5
8	357 972 765	flat connector housing		X	
		for single wiring:	000 979 129	X	1,0
			000 979 219	X	2,5
9	893 971 635	flat contact housing		X	
		for single wiring:	000 979 133	X	1,0
			000 979 133 A	X	1,0
			000 979 135	X	1,0
			000 979 217	X	2,5
10	4B0 971 995	flat connector housing	5 pin	1	
		for single wiring:	000 979 134	X	1,0
			000 979 134 A	X	1,0
			000 979 226	X	2,5
			000 979 226 A	X	2,5

Pos	Part Number	Name	Remarks	Qty	Model
(10)	893 971 995	terminal pin housing		X	
		for single wiring:	000 979 133	X	1,0
			000 979 133 A	X	1,0
			000 979 217	X	2,5
11	1H0 972 755	flat contact housing		X	
		for single wiring:	000 979 133	X	1,0
			000 979 133 A	X	1,0
			000 979 217	X	2,5
12	1H0 972 765	flat contact housing		X	
		for single wiring:	000 979 129	X	1,0
			000 979 129 A	X	1,0
			000 979 219	X	2,5
13	7M0 906 235 C	rd. connector sleeve housing	5 pin	1	
		for single wiring:	000 979 148	X	
			000 979 240	X	
14	7M0 972 732	flat contact housing	5 pin	1	
		for single wiring:	000 979 149	X	
			000 979 241	X	
15	1J0 973 303	flat contact housing	5 pin	1	
		for single wiring:	000 979 132	X	1,0
			000 979 132 A	X	1,0
			000 979 228	X	2,5
16	1J0 973 333	flat contact housing	5 pin	1	
		for single wiring:	000 979 131	X	1,0
			000 979 131 A	X	1,0
			000 979 227	X	2,5
(16)	1J0 973 333 A	flat contact housing	5 pin brown	1	
		for single wiring:	000 979 131	X	1,0
			000 979 131 A	X	1,0
			000 979 227	X	2,5
(16)	1J0 973 333 M	flat contact housing	5 pin	1	
		for single wiring:	000 979 131	X	1,0
			000 979 131 A	X	1,0
			000 979 227	X	2,5

Pos	Part Number	Name	Remarks	Qty	Model

Model	Year	MG	SG	Illustration	VIN No.	Update	14:43	18.02.20100	ETKA
EL	90	9	71	970-90		336			

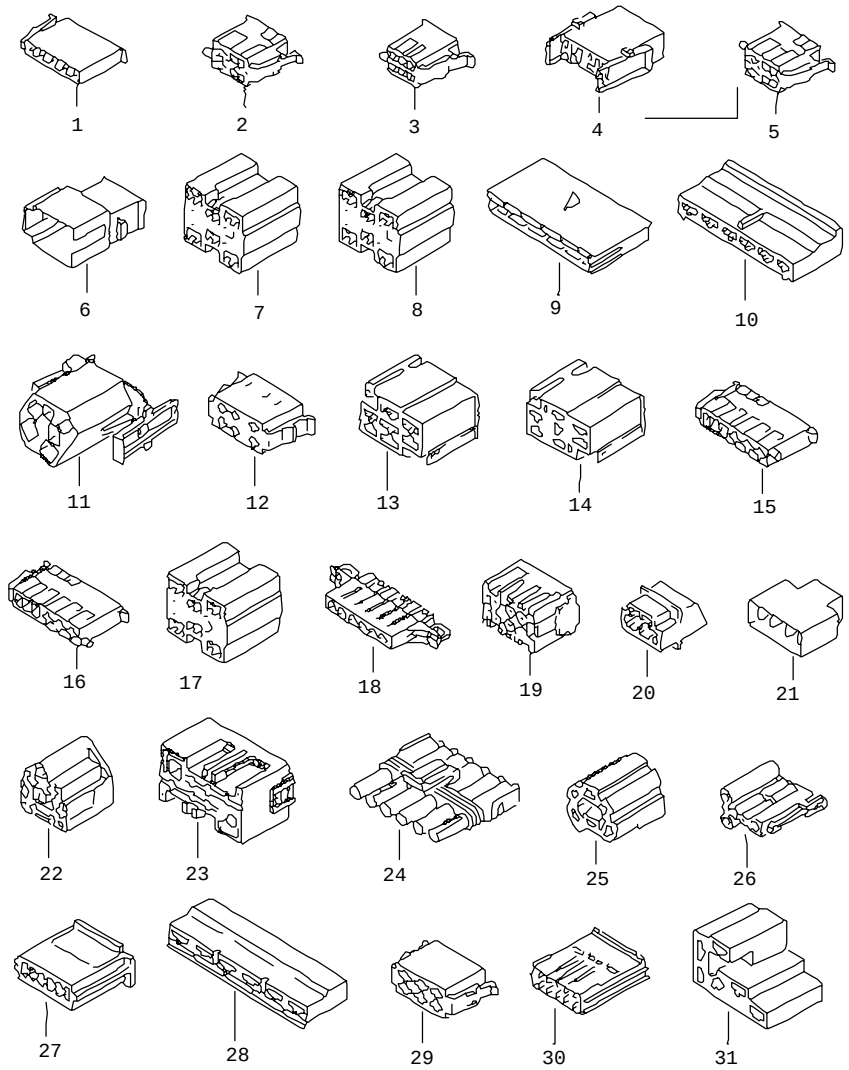

Pos	Part Number	Name	Remarks	Qty	Model
		connector housing	6 pin		
1	191 906 231 E	flat contact housing		X	
		for single wiring:	000 979 133	X	1,0
			000 979 133 A	X	1,0
			000 979 217	X	2,5
2	357 906 968	flat contact housing with helper contact catch		X	
		for single wiring:	000 979 133	X	1,0
			000 979 133 A	X	1,0
			000 979 135	X	1,0
			000 979 217	X	2,5
			000 979 227	X	2,5
			000 979 407	X	6,0
3	357 907 968 A	flat contact housing		X	
		for single wiring:	000 979 133	X	1,0
			000 979 133 A	X	1,0
			000 979 217	X	2,5
4	171 927 235 A	terminal pin housing		X	
		for single wiring:	000 979 106	X	1,0
			000 979 107	X	1,0
			000 979 204	X	2,5
			000 979 402	X	6,0
5	357 941 968	flat contact housing with helper contact catch		X	
		for single wiring:	000 979 133	X	1,0
			000 979 133 A	X	1,0
			000 979 135	X	1,0
			000 979 217	X	2,5
			000 979 227	X	2,5
			000 979 407	X	6,0
6	333 941 973	flat contact housing with helper contact catch		X	
		for single wiring:	000 979 129	X	1,0
			000 979 219	X	2,5
7	701 941 997	terminal pin housing	black	X	
		for single wiring:	000 979 135	X	1,0
			000 979 227	X	2,5
			000 979 407	X	6,0
7	701 941 997	terminal pin housing	black	X	
		for single wiring:	000 979 135	X	1,0
			000 979 227	X	2,5
			000 979 407	X	6,0
8	701 943 997	flat contact housing	yellow	X	
		for single wiring:	000 979 135	X	1,0
			000 979 227	X	2,5
			000 979 407	X	6,0

Pos	Part Number	Name	Remarks	Qty	Model
(8)	701 963 997	flat contact housing	white	X	
		for single wiring:	000 979 135	X	1,0
			000 979 227	X	2,5
			000 979 407	X	6,0
9	161 945 247	flat contact housing		X	
		for single wiring:	000 979 135	X	1,0
			000 979 227	X	2,5
			000 979 407	X	6,0
10	431 945 247	terminal pin housing		X	
		for single wiring:	000 979 107	X	1,0
			000 979 204	X	2,5
			000 979 402	X	6,0
11	191 953 631	terminal pin housing		X	
		for single wiring:	000 979 133	X	1,0
			000 979 133 A	X	1,0
			000 979 135	X	1,0
			000 979 217	X	2,5
			000 979 227	X	2,5
			000 979 407	X	6,0
12	357 959 545	terminal pin housing		X	
		for single wiring:	000 979 135	X	1,0
			000 979 227	X	2,5
			000 979 407	X	6,0
13	191 959 869	flat contact housing		X	
		for single wiring:	000 979 135	X	1,0
			000 979 227	X	2,5
			000 979 407	X	6,0
14	191 959 869 A	flat contact housing		X	
		for single wiring:	000 979 135	X	1,0
			000 979 227	X	2,5
			000 979 407	X	6,0
15	357 959 968	flat contact housing with helper contact catch		X	
		for single wiring:	000 979 133	X	1,0
			000 979 133 A	X	1,0
			000 979 135	X	1,0
			000 979 217	X	2,5
			000 979 227	X	2,5
			000 979 407	X	6,0
16	357 959 968 B	flat contact housing with helper contact catch		X	
		for single wiring:	000 979 133	X	1,0
			000 979 133 A	X	1,0
			000 979 135	X	1,0
			000 979 217	X	2,5
			000 979 227	X	2,5
			000 979 407	X	6,0
17	701 959 997	flat contact housing	blue	X	
		for single wiring:	000 979 135	X	1,0
			000 979 227	X	2,5
			000 979 407	X	6,0
18	155 971 617	round connector housing		X	
		for single wiring:	000 979 128	X	1,0
19	443 971 635	rd. connector sleeve housing		X	
		for single wiring:	000 979 117	X	1,0
			000 979 213	X	2,5
20	477 971 829	terminal pin housing		X	
		for single wiring:	000 979 105	X	1,0
			000 979 106	X	1,0
			000 979 107	X	1,0
21	803 971 968	junction box		X	
22	857 971 972	flat contact housing		X	
		for single wiring:	000 979 133	X	1,0
			000 979 133 A	X	1,0
			000 979 217	X	2,5
23	8L0 971 972	flat connector housing		X	
		for single wiring:	000 979 135	X	1,0
			000 979 227	X	2,5
			000 979 407	X	6,0
24	443 971 973	round connector housing		X	
		for single wiring:	000 979 201	X	2,5
25	481 971 975	terminal pin housing		X	
		for single wiring:	000 979 107	X	1,0
			000 979 204	X	2,5
			000 979 402	X	6,0
26	171 971 997 B	rd. connector sleeve housing		X	
		for single wiring:	000 979 108	X	1,0
			000 979 110	X	1,0
			000 979 208	X	2,5
			000 979 211	X	2,5
			000 979 305	X	4,0
27	321 971 998 A	spring contact housing		X	
		for single wiring:	000 979 102	X	1,0
28	861 972 505	terminal pin housing		X	
		for single wiring:	000 979 107	X	1,0
			000 979 204	X	2,5
			000 979 402	X	6,0
29		see illustration:	971-01		
30	443 972 954	spring contact housing		X	
		for single wiring:	000 979 102	X	1,0

Pos	Part Number	Name	Remarks	Qty	Model
31	171 972 999	terminal pin housing		X	
		for single wiring:	000 979 107	X	1,0
			000 979 204	X	2,5
			000 979 402	X	6,0
32	6X0 972 623	flat contact housing	6 pin black	1	
		for single wiring:	000 979 306		
			000 979 135		
			000 979 227		
			000 979 407		

Pos	Part Number	Name	Remarks	Qty	Model

Model	Year	MG	SG	Illustration	VIN No.	Update	14:43	18.02.20100	ETKA
EL	90	9	71	970-91		336			

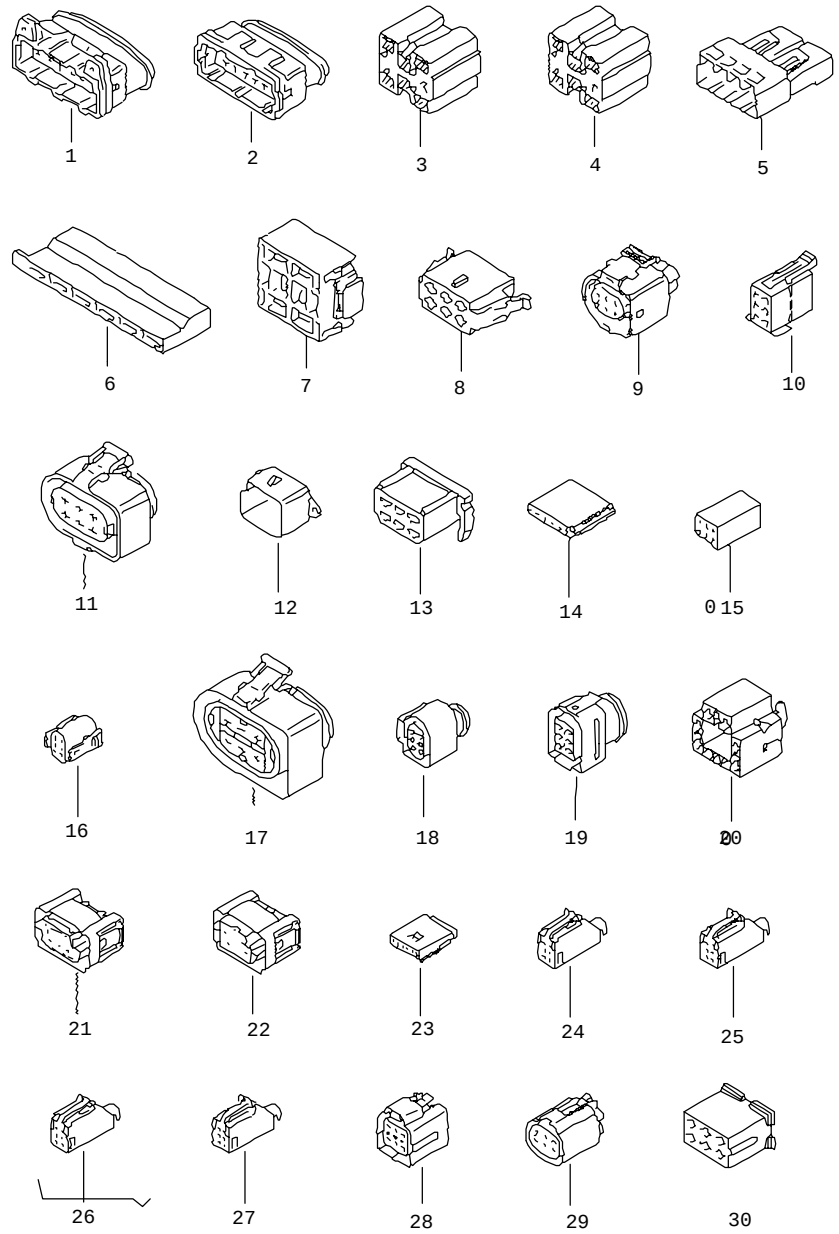

Pos	Part Number	Name	Remarks	Qty	Model
		connector housing	6 pin		
1	4A0 906 236	flat contact housing		X	
		for single wiring:	000 979 133	X	1,0
			000 979 133 A	X	1,0
			000 979 217	X	2,5
2	022 906 233 A	terminal pin housing		X	
		for single wiring:	000 979 133	X	1,0
			000 979 133 A	X	1,0
			000 979 217	X	2,5
3	701 927 997	flat contact housing		X	
		for single wiring:	000 979 135	X	1,0
			000 979 227	X	2,5
			000 979 407	X	6,0
4	701 941 997 A	terminal pin housing		X	
		for single wiring:	000 979 135	X	1,0
			000 979 227	X	2,5
			000 979 407	X	6,0
5	357 937 541	cable connector	red	X	
6	183 971 831	flat connector housing			
		for single wiring:	000 979 107	X	1,0
			000 979 204	X	2,5
			000 979 402	X	6,0
7	447 937 520	junction box	black	X	
8	1H0 972 773	flat contact housing		X	
		for single wiring:	000 979 135	X	1,0
			000 979 227	X	2,5
			000 979 407	X	6,0
9	3A0 973 206 A	flat contact housing	6 pin	X	
		for single wiring:	000 979 131	X	1,0
			000 979 131 A	X	1,0
10	2D0 971 989 BM	flat contact housing	6 pin	1	
		switch			
		cruise control system			
		for single wiring:	000 979 133		
			000 979 225		
10	2D0 971 989 BM	flat contact housing	6 pin	1	
		switch			
		cruise control system			
		for single wiring:	000 979 133		
			000 979 225		
11	1H0 973 763	flat contact housing		X	
		for single wiring:	000 979 135	X	1,0
			000 979 227	X	2,5
			000 979 407	X	6,0

Pos	Part Number	Name	Remarks	Qty	Model
12	447 919 216 BD	flat connector housing	6 pin	X	
13	2D0 971 989 BS	flat connector housing connecting piece idling stabilsation	6 pin	1	
14	3A0 972 706 H	flat contact housing for single wiring:	6 pin 000 979 131 000 979 131 A	X X X	 1,0 1,0
15	3A0 972 706 J	flat contact housing for single wiring:	6 pin 000 979 131 000 979 131 A	1 X X	 1,0 1,0
16	3A0 973 606	flat contact housing for single wiring:	6 pin 000 979 002	1 X	 0,5
17	1H0 973 763	flat contact housing for single wiring:	6 pin 000 979 135 000 979 227 000 979 407	1 X X X	 1,0 2,5 6,0
18	1J0 973 713	flat contact housing for single wiring:	6 pin 000 979 131 000 979 131 A	1 X X	 1,0 1,0
19	3B0 959 384	flat contact housing with helper contact catch for single wiring:	6 pin 000 979 133 000 979 133 A 000 979 135	X X X X	 1,0 1,0 1,0
20	7M0 953 631 A	flat contact housing for single wiring:	6 pin 000 979 135 000 979 227 000 979 407	1 X X X	 1,0 2,5 6,0
21	7M0 973 119	flat contact housing sensor for headlight range control for single wiring:	6 pin black 000 979 009	1 X	 0,5
22	4B0 972 571	flat contact housing with cap for single wiring:	6 pin 000 979 003 A	1 X	 0,5
23	4B0 971 978 A	flat connector housing for single wiring:	6 pin 000 979 009 000 979 003 A	X X X	 0,5 0,5
24	4B0 971 636	flat contact housing for single wiring:	6 pin black 000 979 003 A	X X	 0,5
25	4B0 971 636 A	flat contact housing for single wiring:	6 pin brown 000 979 003 A	X X	 0,5
26	4B0 971 636 B	flat contact housing for single wiring:	6 pin red 000 979 003 A	X X	 0,5
27	4B0 971 636 D	flat contact housing for single wiring:	6 pin blue 000 979 003 A	X X	 0,5
28	2TA 973 116 A	terminal pin housing	6 pin	1	
29	7M0 906 236	rd. connector sleeve housing	6 pin	1	
30	2D0 971 989 AQ	flat connector housing for single wiring:	6 pin 000 979 135 000 979 227 000 979 407	1 X X X	 1,0 2,5 6,0

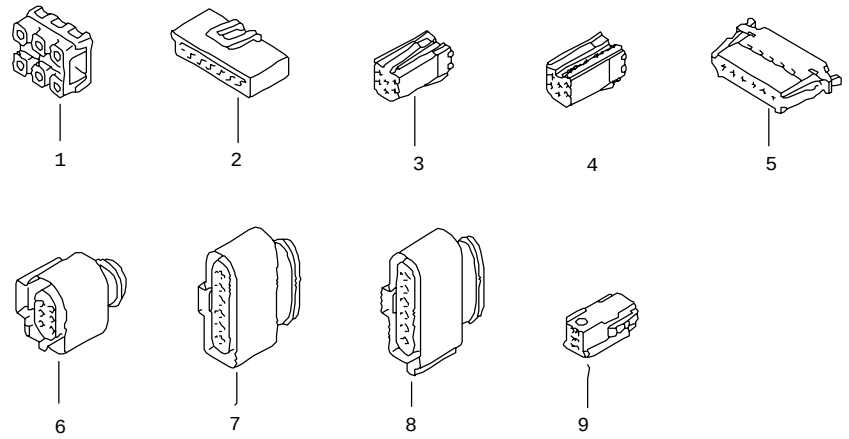

Pos	Part Number	Name	Remarks	Qty	Model
		connector housing	6 pin		
1	2D0 971 989 CC	flat contact housing	6 pin	1	
		for single wiring:	2D0 972 982 A		
2	2D0 971 989 G	flat connector housing	6 pin	1	
3	4A0 972 643	flat contact housing	6 pin	1	
			yellow		
		for single wiring:	000 979 131	X	1,0
4	4A0 972 643 A	flat contact housing	6 pin	1	
			green		
		for single wiring:	000 979 131	X	1,0
5	3B0 972 706	flat contact housing	6 pin	1	
		for single wiring:	000 979 131	X	1,0
			000 979 131 A	X	1,0
6	1J0 973 713 G	flat contact housing	6 pin	1	
			grey		
		for single wiring:	000 979 131	X	1,0
			000 979 131 A	X	1,0
7	1J0 973 726	flat contact housing with	6 pin	1	
		helper contact catch	black		
		for single wiring:	000 979 133	X	1,0
			000 979 133A	X	1,0
			000 979 225	X	2,5
			000 979 225 A	X	2,5
8	--- --- --- .	discontinued / replacement:	1J0 973 726	1	
-	4B0 973 121	flat contact housing	6 pin	1	
		connecting piece			
		remote control			
		stationary heater			
		for single wiring:	000 979 009	X	0,5
-	4B0 972 586	flat contact housing	6 pin	X	
		side airbag unit	yellow		
		for single wiring:	000 979 010 A	X	
-	6X0 972 926	flat contact housing	6 pin	1	
			black		
		for single wiring:	000 979 133		
			000 979 133 A		
			000 979 225		
			000 979 225 A		

Model	Year	MG	SG	Illustration	VIN No.	Update	14:44	18.02.20100	ETKA
EL	90	9	71	971-00		336			

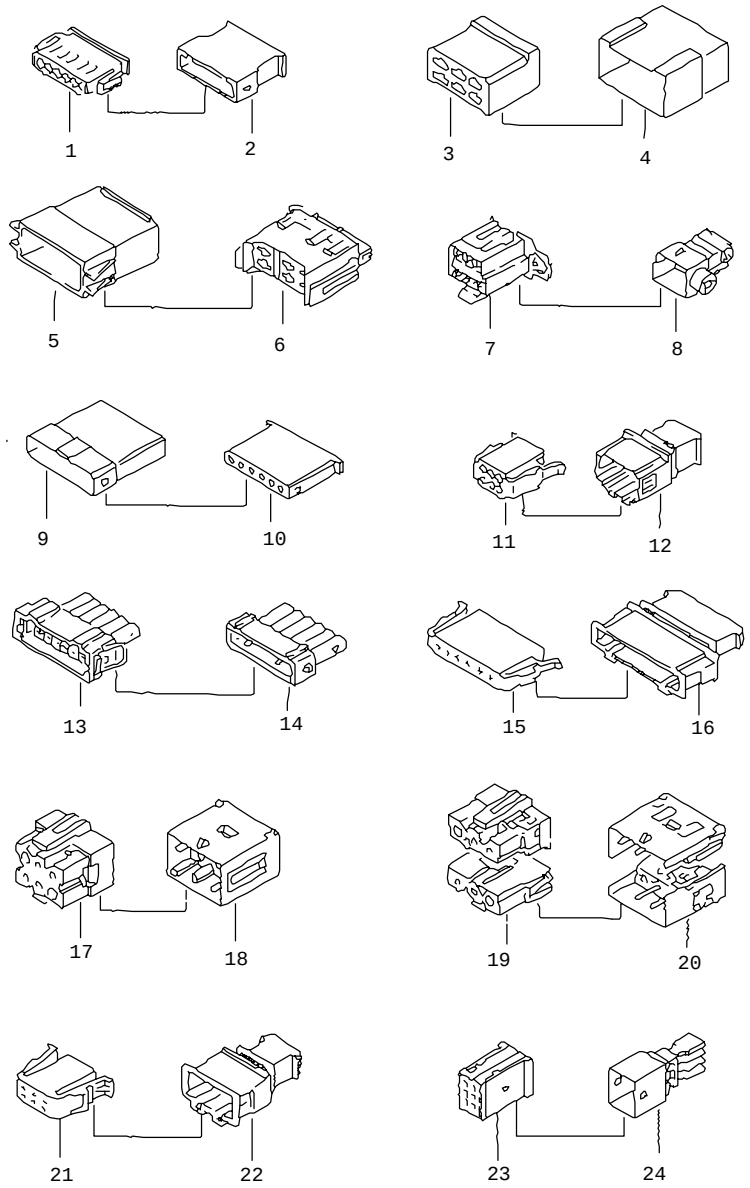

Pos	Part Number	Name	Remarks	Qty	Model
		connector housing	6 pin		
(1)	893 971 636	flat contact housing		X	
		for single wiring:	000 979 133	X	1,0
			000 979 133 A	X	1,0
			000 979 217	X	2,5
1	4B0 971 996	flat connector housing	6 pin	1	
		for single wiring:	000 979 134	X	1,0
			000 979 134 A	X	1,0
			000 979 226	X	2,5
			000 979 226 A	X	2,5
2	893 971 996	flat connector housing		X	
		for single wiring:	000 979 103	X	1,0
3	803 971 831	terminal pin housing		X	
		for single wiring:	000 979 107	X	1,0
			000 979 204	X	2,5
			000 979 402	X	6,0
4	803 971 833 A	flat connector housing		X	
		for single wiring:	000 979 104	X	1,0
			000 979 203	X	2,5
			000 979 409	X	6,0
5	893 971 831 A	flat connector housing		X	
		for single wiring:	000 979 104	X	1,0
			000 979 203	X	2,5
			000 979 409	X	6,0
6	443 972 996	flat contact housing		X	
		for single wiring:	000 979 135	X	1,0
			000 979 227	X	2,5
			000 979 407	X	6,0
7	893 971 833	flat contact housing		X	
		for single wiring:	000 979 133	X	1,0
			000 979 133 A	X	1,0
			000 979 217	X	2,5
8	853 971 834	flat connector housing		X	
		for single wiring:	000 979 103	X	1,0
9	171 971 998 E	round connector housing		X	
		for single wiring:	000 979 109	X	1,0
			000 979 209	X	2,5
10	171 971 999 E	rd. connector sleeve housing		X	
		for single wiring:	000 979 108	X	1,0
			000 979 208	X	2,5
11	191 972 723	terminal pin housing		X	
		for single wiring:	000 979 133	X	1,0
			000 979 133 A	X	1,0
			000 979 217	X	2,5

Pos	Part Number	Name	Remarks	Qty	Model
12	191 972 733	terminal pin housing		X	
		for single wiring:	000 979 129	X	1,0
			000 979 219	X	2,5
13	357 972 756	flat contact housing		X	
		for single wiring:	000 979 133	X	1,0
			000 979 133 A	X	1,0
			000 979 217	X	2,5
14	357 972 766	flat connector housing		X	
		for single wiring:	000 979 129	X	1,0
			000 979 219	X	2,5
15	191 972 706	flat contact housing		X	
		for single wiring:	000 979 133	X	1,0
			000 979 133 A	X	1,0
			000 979 217	X	2,5
16	191 972 716	flat connector housing		X	
		for single wiring:	000 979 129	X	1,0
			000 979 219	X	2,5
17	4A0 972 986	rd. connector sleeve housing	black/green	X	
		for single wiring:	000 979 117	X	1,0
			000 979 120	X	1,0
			000 979 213	X	2,5
			000 979 214	X	2,5
18	4A0 972 985	round connector housing	black/green	X	
		for single wiring:	000 979 118	X	1,0
			000 979 119	X	1,0
			000 979 215	X	2,5
			000 979 216	X	2,5
19		comprising:	4A0 972 242	1	
			4A0 972 244	1	
		see illustration:	972-12		
20		comprising:	4A0 972 241	1	
			4A0 972 243	1	
		see illustration:	972-12		
21	535 972 723 A	flat contact housing	6 pin	1	
		for single wiring:	000 979 131	X	1,0
			000 979 131 A	X	1,0
22	535 972 733	flat contact housing	6 pin black	X	
		for single wiring:	000 979 132	X	1,0
			000 979 132 A	X	1,0
23	4B0 971 833	flat contact housing	6 pin	X	
		for single wiring:	000 979 003 A	X	0,5
24	4B0 971 834	flat contact housing	6 pin	X	

Pos	Part Number	Name	Remarks	Qty	Model

Model	Year	MG	SG	Illustration	VIN No.	Update	14:44	18.02.20100	ETKA
EL	90	9	71	971-01		336			

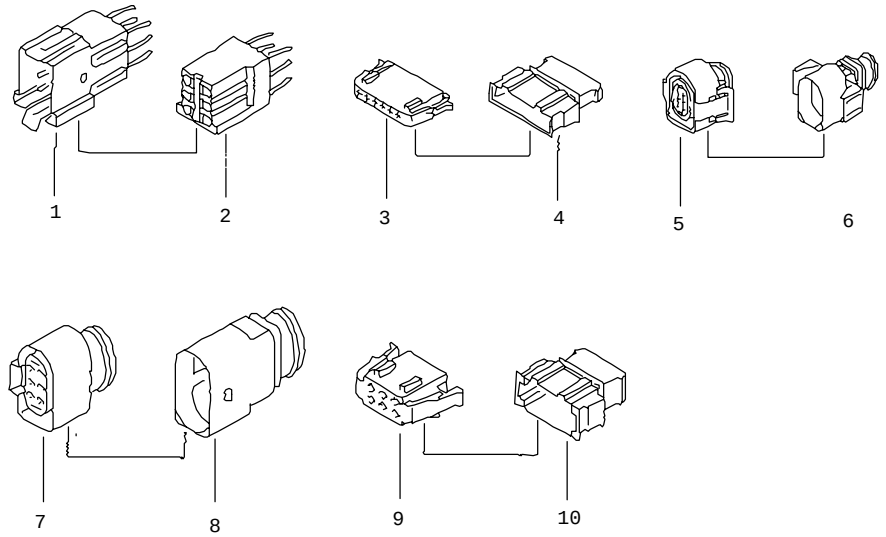

Pos	Part Number	Name	Remarks	Qty	Model
		connector housing	6 pin		
1	2TA 973 106	round connector housing	6 pin	1	L 80
2	2TA 973 116	cylindrical connector with retaining lug	6 pin	1	L 80
3	535 972 706	flat contact housing	6 pin	X	
		for single wiring:	000 979 131	X	1,0
			000 979 131 A	X	1,0
4	535 972 716	flat contact housing	6 pin	1	
		for single wiring:	000 979 132	X	1,0
			000 979 132 A	X	1,0
5	3A0 973 713	flat contact housing		X	
		for single wiring:	000 979 131	X	1,0
			000 979 131 A	X	1,0
6	3A0 973 813	flat contact housing	6 pin	1	
		for contact:	000 979 132	X	1,0
			000 979 132 A	X	1,0
7	1J0 973 733	flat contact housing	6 pin	2	
		for single wiring:	000 979 133	X	1,0
			000 979 133 A	X	1,0
			000 979 225	X	2,5
			000 979 225 A	X	2,5
8	1J0 973 833	flat contact housing	6 pin	1	
		for single wiring:	000 979 134	X	1,0
			000 979 134 A	X	1,0
			000 979 226	X	2,5
			000 979 226 A	X	2.5
(9)	191 972 773	flat contact housing	6 pin	1	
		for single wiring:	000 979 135	X	1,0
			000 979 227	X	2,5
			000 979 407	X	6,0
9	1J0 972 773	flat contact housing	6 pin	1	
		for single wiring:	000 979 135	X	1,0
			000 979 227	X	2,5
			000 979 407	X	6,0
10	191 972 783	flat contact housing	6 pin	1	
		for single wiring:	000 979 130	X	1,0
			000 979 220	X	2,5
			000 979 302	X	4,0

Model	Year	MG	SG	Illustration	VIN No.	Update	14:44	18.02.20100	ETKA
EL	90	9	71	971-10		336			

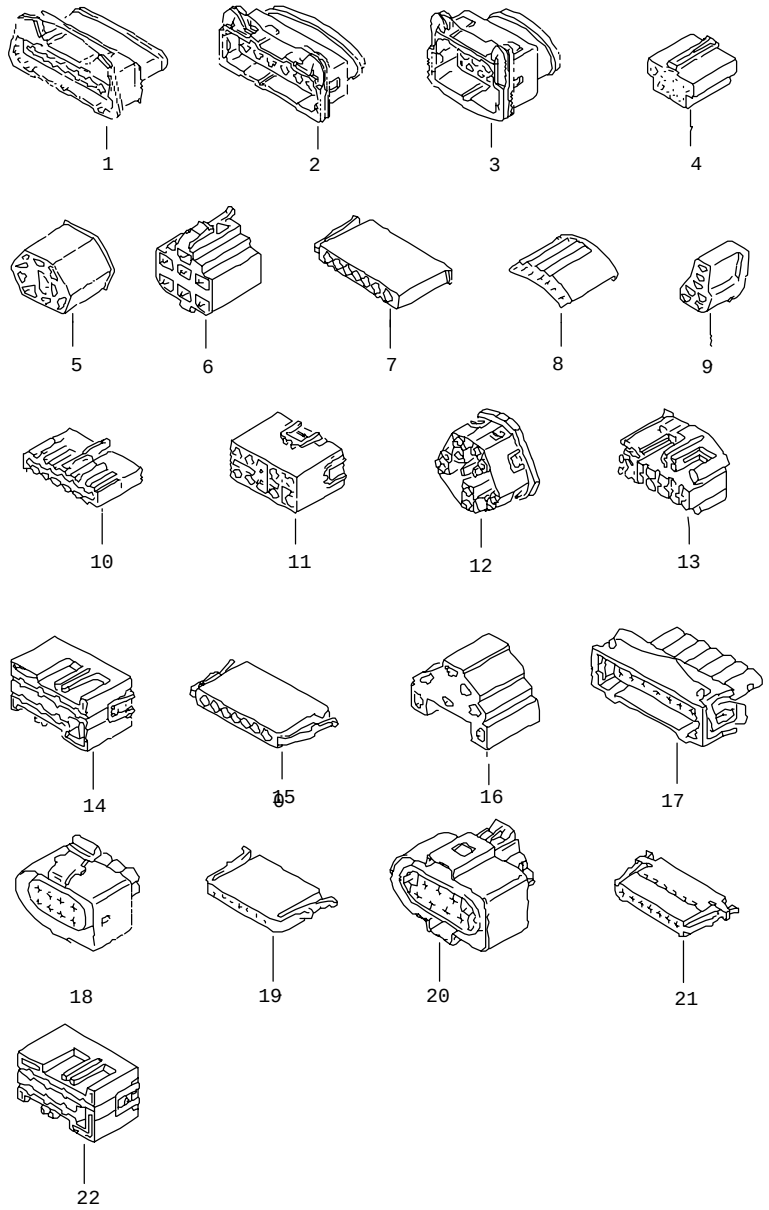

Pos	Part Number	Name	Remarks	Qty	Model
		connector housing	7 pin		
1	071 906 233	flat contact housing		X	
		for single wiring:	000 979 133	X	1,0
			000 979 133 A	X	1,0
			000 979 217	X	2,5
2	071 906 233 A	flat contact housing		X	
		for single wiring:	000 979 133	X	1,0
			000 979 133 A	X	1,0
			000 979 217	X	2,5
3	191 906 357	flat contact housing		X	
		for single wiring:	000 979 133	X	1,0
			000 979 133 A	X	1,0
			000 979 217	X	2,5
4	191 941 336	flat contact housing		X	
		for single wiring:	000 979 133	X	1,0
			000 979 133 A	X	1,0
			000 979 217	X	2,5
5	111 953 631	terminal pin housing		X	
		for single wiring:	000 979 105	X	1,0
			000 979 106	X	1,0
			000 979 107	X	1,0
			000 979 204	X	2,5
			000 979 402	X	6,0
6	357 953 631	flat contact housing		X	
		for single wiring:	000 979 135	X	1,0
			000 979 227	X	2,5
			000 979 407	X	6,0
7	1H0 953 633	flat contact housing		X	
		for single wiring:	000 979 133	X	1,0
			000 979 133 A	X	1,0
			000 979 217	X	2,5
8	171 953 633	terminal pin housing		X	
		for single wiring:	000 979 105	X	1,0
			000 979 106	X	1,0
9	--- --- ---	no longer available		X	
10	321 971 946	flat contact housing		X	
		for single wiring:	000 979 133	X	1,0
			000 979 133 A	X	1,0
			000 979 217	X	2,5
11	893 971 960	flat contact housing		X	
		for single wiring:	000 979 133	X	1,0
			000 979 133 A	X	1,0
			000 979 217	X	2,5

Pos	Part Number	Name	Remarks	Qty	Model
12	4A0 971 975	flat contact housing		X	
		for single wiring:	000 979 135	X	1,0
			000 979 227	X	2,5
			000 979 407	X	6,0
13	857 971 978	flat contact housing		X	
		for single wiring:	000 979 133	X	1,0
			000 979 133 A	X	1,0
			000 979 135	X	1,0
			000 979 217	X	2,5
			000 979 227	X	2,5
			000 979 407	X	6,0
14	--- --- --- .	discontinued / replacement:	8L0 971 971		
15	191 972 707	flat contact housing		X	
		for single wiring:	000 979 133	X	1,0
			000 979 133 A	X	1,0
			000 979 217	X	2,5
16	823 972 997	terminal pin housing		X	
		for single wiring:	000 979 107	X	1,0
			000 979 204	X	2,5
			000 979 402	X	6,0
17	357 972 757	flat contact housing		X	
		for single wiring:	000 979 133	X	1,0
			000 979 133 A	X	1,0
			000 979 217	X	2,5
18	3A0 973 207 A	flat contact housing		X	
		for single wiring:	000 979 133	X	1,0
			000 979 133 A	X	1,0
			000 979 217	X	2,5
19	535 972 707	flat contact housing	7 pin	1	
		for single wiring:	000 979 131	X	1,0
			000 979 131 A	X	1,0
20	3A0 973 737	flat contact housing	7 pin	1	
		for single wiring:	000 979 133	X	1,0
			000 979 133 A	X	1,0
			000 979 217	X	2,5
21	3B0 972 707	flat contact housing	7 pin	1	
		for single wiring:	000 979 131	X	1,0
			000 979 131 A	X	1,0
22	8L0 971 971	flat contact housing	7 pin	1	
		for single wiring:	000 979 135	X	1,0
			000 979 227	X	2,5
			000 979 407	X	6,0

Pos	Part Number	Name	Remarks	Qty	Model

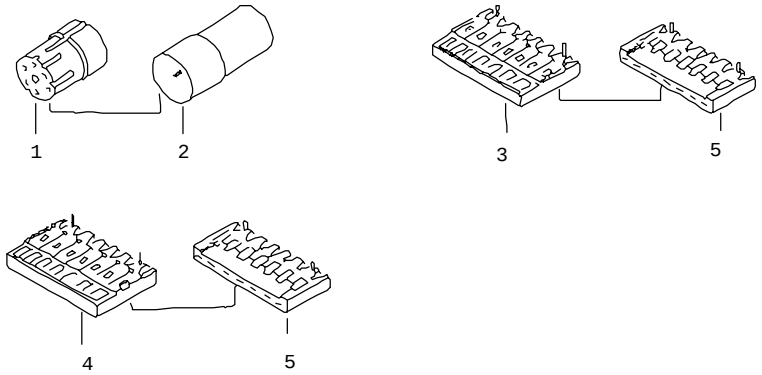

Pos	Part Number	Name	Remarks	Qty	Model
		connector housing	7 pin		
1	803 971 979	rd. connector sleeve housing		X	
		for single wiring:	000 979 108	X	1,0
			000 979 110	X	1,0
			000 979 208	X	2,5
			000 979 211	X	2,5
			000 979 305	X	4,0
2	803 971 980	round connector housing		X	
		for single wiring:	000 979 109	X	1,0
			000 979 111	X	1,0
			000 979 209	X	2,5
			000 979 210	X	2,5
			000 979 304	X	4,0
3	191 972 530	spring contact housing (long)	black	X	
		for single wiring:	000 979 115	X	1,0
4	191 972 530 A	spring contact housing (long)	plain	X	
		for single wiring:	000 979 115	X	1,0
5	191 972 531	spring contact housing (short)	black	X	
		for single wiring:	000 979 115	X	1,0

Model	Year	MG	SG	Illustration	VIN No.	Update	14:45	18.02.20100	ETKA
EL	90	9	71	971-20		336			

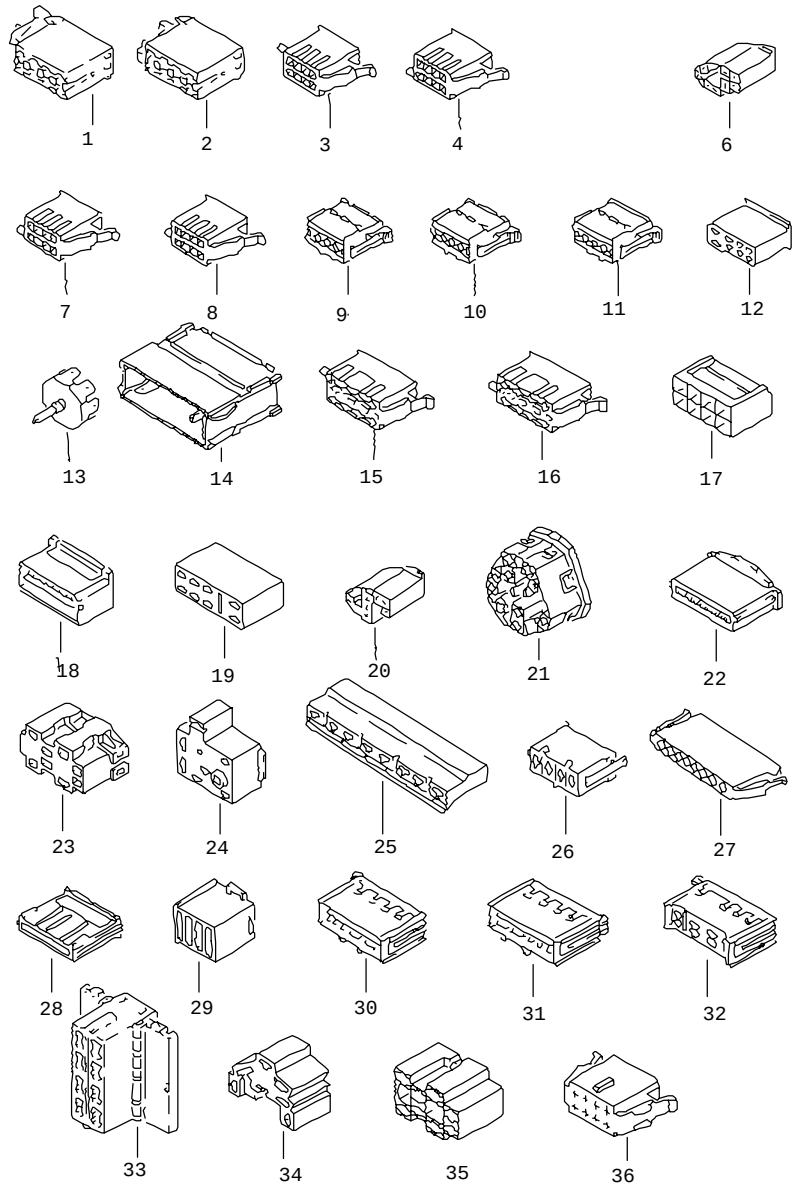

Pos	Part Number	Name	Remarks	Qty	Model
		connector housing	8 pin		
1	357 035 447	flat contact housing	black	X	
		for single wiring:	000 979 133	X	1,0
			000 979 133 A	X	1,0
			000 979 217	X	2,5
2	357 035 447 A	flat contact housing	brown	X	
		for single wiring:	000 979 133	X	1,0
			000 979 133 A	X	1,0
			000 979 217	X	2,5
3	357 919 968 B	flat contact housing with helper contact catch		X	
		for single wiring:	000 979 133	X	1,0
			000 979 133 A	X	1,0
			000 979 217	X	2,5
4	357 947 968	flat contact housing with helper contact catch		X	
		for single wiring:	000 979 133	X	1,0
			000 979 133 A	X	1,0
			000 979 217	X	2,5
5	--- --- ---	no longer available			
6	171 953 635 A	terminal pin housing		X	
		for single wiring:	000 979 105	X	1,0
			000 979 106	X	1,0
7	357 953 968 B	flat contact housing with helper contact catch		X	
		for single wiring:	000 979 133	X	1,0
			000 979 133 A	X	1,0
			000 979 217	X	2,5
8	357 955 968	flat contact housing with helper contact catch		X	
		for single wiring:	000 979 133	X	0,5
			000 979 133 A	X	1,0
			000 979 217	X	2,5
9	281 957 897 A	flat connector housing		X	
		for single wiring:	000 979 133	X	1,0
			000 979 133 A	X	1,0
			000 979 217	X	2,5
10	281 957 897 C	flat connector housing		X	
		for single wiring:	000 979 133	X	1,0
			000 979 133 A	X	1,0
			000 979 217	X	2,5
11	281 957 897 E	flat connector housing		X	
		for single wiring:	000 979 133	X	1,0
			000 979 133 A	X	1,0
			000 979 217	X	2,5

Pos	Part Number	Name	Remarks	Qty	Model
12	411 963 367	terminal pin housing		X	
		for single wiring:	000 979 105	X	1,0
			000 979 106	X	1,0
			000 979 107	X	1,0
			000 979 204	X	2,5
			000 979 402	X	6,0
13	321 971 519 A	ground connector	6,3	X	
14	893 971 832	flat connector housing		X	
		for single wiring:	000 979 104	X	1,0
			000 979 203	X	2,5
			000 979 409	X	6,0
15	357 971 968	flat contact housing with helper contact catch		X	
		for single wiring:	000 979 135	X	1,0
			000 979 227	X	2,5
			000 979 407	X	6,0
16	357 971 968 A	flat contact housing with helper contact catch		X	
		for single wiring:	000 979 135	X	1,0
			000 979 227	X	2,5
			000 979 407	X	6,0
17	447 971 971	terminal pin housing		X	
		for single wiring:	000 979 105	X	1,0
			000 979 106	X	1,0
			000 979 212	X	2,5
			000 979 405	X	6,0
18	811 971 971	flat contact housing		X	
		for single wiring:	000 979 135	X	1,0
			000 979 227	X	2,5
			000 979 407	X	6,0
19	823 971 971	terminal pin housing		X	
		for single wiring:	000 979 107	X	1,0
			000 979 204	X	2,5
			000 979 402	X	6,0
20	811 971 971 A	terminal pin housing		X	
		for single wiring:	000 979 105	X	1,0
			000 979 106	X	1,0
21	4A0 971 975	flat contact housing		X	
		for single wiring:	000 979 135	X	1,0
			000 979 227	X	2,5
			000 979 407	X	6,0
22	113 971 998 B	spring contact housing		X	
		for single wiring:	000 979 204	X	1,0
23	191 971 999	flat contact housing		X	
		for single wiring:	000 979 135	X	1,0
			000 979 227	X	2,5
			000 979 407	X	6,0
24	321 971 999 A	terminal pin housing		X	
		for single wiring:	000 979 105	X	1,0
			000 979 106	X	1,0
			000 979 107	X	1,0
			000 979 204	X	2,5
			000 979 402	X	6,0
25	867 972 505	terminal pin housing		X	
		for single wiring:	000 979 107	X	1,0
			000 979 204	X	2,5
			000 979 402	X	6,0
26	171 972 507	flat contact housing		X	
		for single wiring:	000 979 133	X	1,0
			000 979 133 A	X	1,0
			000 979 217	X	2,5
27	1H0 972 708	flat contact housing		X	
		for single wiring:	000 979 133	X	1,0
			000 979 133 A	X	1,0
			000 979 217	X	2,5
(27)	1J0 972 708	flat contact housing	8 pin	1	
		for single wiring:	000 979 133	X	1,0
			000 979 133 A	X	1,0
			000 979 133 AB	X	1,0
			000 979 225	X	2,5
			000 979 225A	X	2,5
28	443 972 955	spring contact housing		X	
		for single wiring:	000 979 116	X	1,0
29	443 972 961 B	flat contact housing		X	
		for single wiring:	000 979 135	X	1,0
			000 979 227	X	2,5
			000 979 407	X	6,0
30	443 972 973	flat contact housing		X	
		for single wiring:	000 979 135	X	1,0
			000 979 227	X	2,5
			000 979 407	X	6,0
31	443 972 974	flat contact housing with retainer guide		X	
		for single wiring:	000 979 135	X	1,0
			000 979 227	X	2,5
			000 979 407	X	6,0

Pos	Part Number	Name	Remarks	Qty	Model
32	443 972 994	flat contact housing		X	
		for single wiring:	000 979 135	X	1,0
			000 979 227	X	2,5
			000 979 407	X	6,0
33	447 972 994	flat connector housing		X	
		for single wiring:	000 979 105	X	1,0
			000 979 106	X	1,0
			000 979 212	X	2,5
			000 979 405	X	6,0
35	191 972 999 A	terminal pin housing		X	
		for single wiring:	000 979 135	X	1,0
			000 979 227	X	2,5
			000 979 407	X	6,0
36	1H0 972 724	flat contact housing		X	
		for single wiring:	000 979 133	X	1,0
			000 979 133 A	X	1,0
			000 979 217	X	2,5

Pos	Part Number	Name	Remarks	Qty	Model

Model	Year	MG	SG	Illustration	VIN No.	Update	14:45	18.02.20100	ETKA
EL	90	9	71	971-21		336			

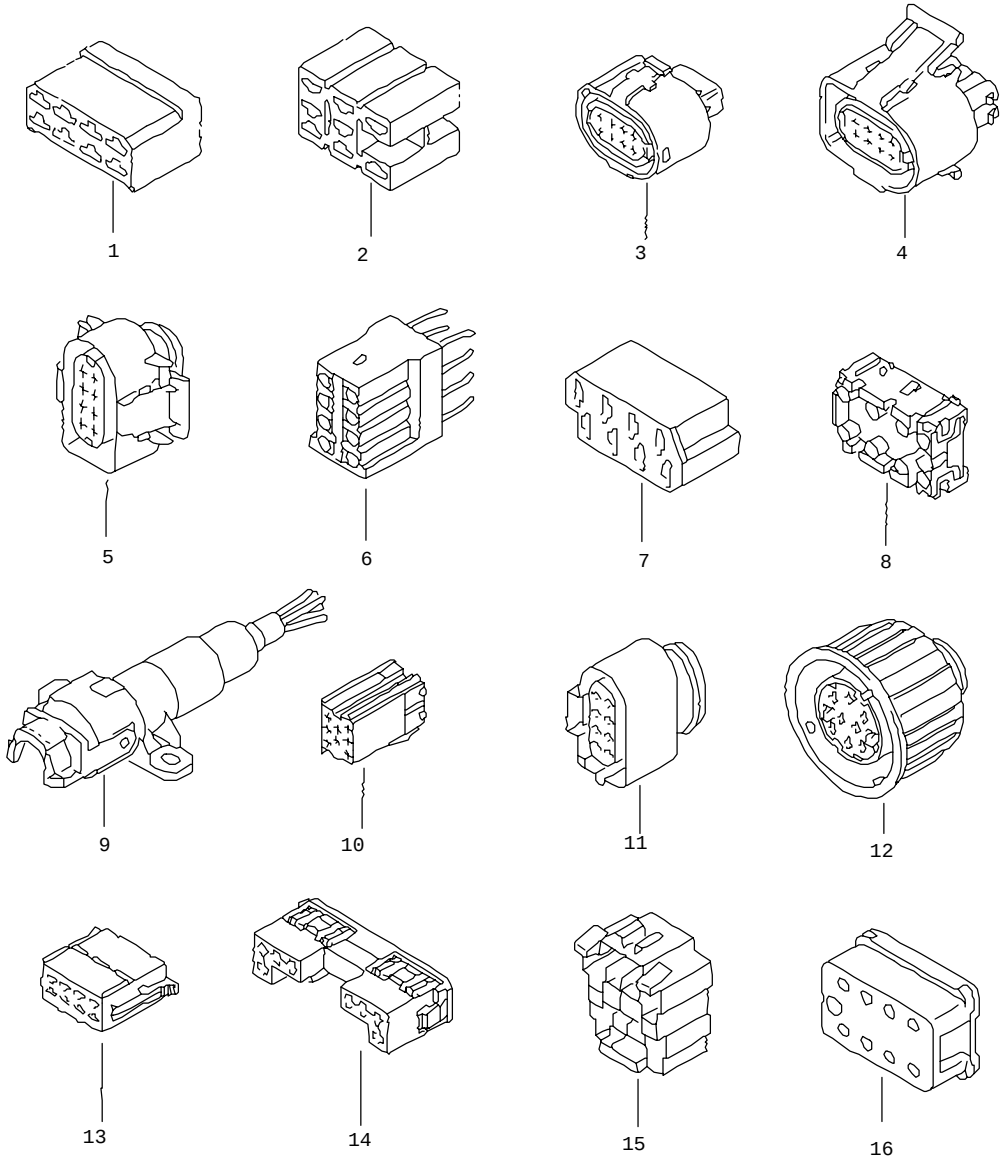

Pos	Part Number	Name	Remarks	Qty	Model
		connector housing	8 pin		
1	803 971 971	terminal pin housing		X	
		for single wiring:	000 979 107	X	1,0
			000 979 204	X	2,5
			000 979 402	X	6,0
2	821 971 971 A	flat connector housing		X	
		for single wiring:	000 979 107	X	1,0
			000 979 204	X	2,5
			000 979 402	X	6,0
3	1H0 973 208	flat contact housing with gasket		X	
		for single wiring:	000 979 131	X	1,0
			000 979 131 A	X	1,0
4	3A0 973 714	flat contact housing	8 pin	1	
		for single wiring:	000 979 131	X	1,0
			000 979 131 A	X	1,0
5	4A0 973 714 G	flat contact housing	8 pin	1	
		for single wiring:	000 979 131	X	1,0
			000 979 131 A	X	1,0
6	2TA 973 118	cylindrical connector with retaining lug	8 pin	1	L 80
7	2D0 971 989 AN	terminal pin housing	8 pin	1	
8	2D0 971 989 BH	round connector housing	8 pin	1	
		for contact:	2D0 972 982 A	X	
9	2D0 971 989 R	flat contact housing	8 pin	1	
10	4A0 972 643 B	flat contact housing	8 pin blue	1	
		for single wiring:	000 979 131	X	1,0
11	1J0 973 714 G	flat contact housing	8 pin grey	1	
		for single wiring:	000 979 131	X	1,0
			000 979 131 A	X	1,0
12	045 973 121	flat contact housing	8 pin	1	
		for single wiring:	000 979 225	X	2,5
			000 979 225 A	X	2,5
13	281 957 897 C	flat connector housing	8 pin	X	
		for single wiring:	000 979 133	X	1,0
			000 979 133 A	X	1,0
			000 979 217	X	2,5

Pos	Part Number	Name	Remarks	Qty	Model
14	8L0 972 974	flat contact housing connecting piece steering col. combi switch for single wiring:	8 pin 000 979 126 000 979 227	1 X X	 1,0 2,5
15	3A0 937 517	junction box	8-pin	X	
16	2D0 971 989 DF	flat contact housing coupling piece loom for cruise control system for contact:	8 pin 2D0 972 982 F	1	
-	6X0 972 928	flat contact housing emergency light switch for single wiring:	8 pin 000 979 133 000 979 133 A 000 979 225 000 979 225 A	1	

Pos	Part Number	Name	Remarks	Qty	Model

Model	Year	MG	SG	Illustration	VIN No.	Update	14:46	18.02.20100	ETKA
EL	90	9	71	971-30		336			

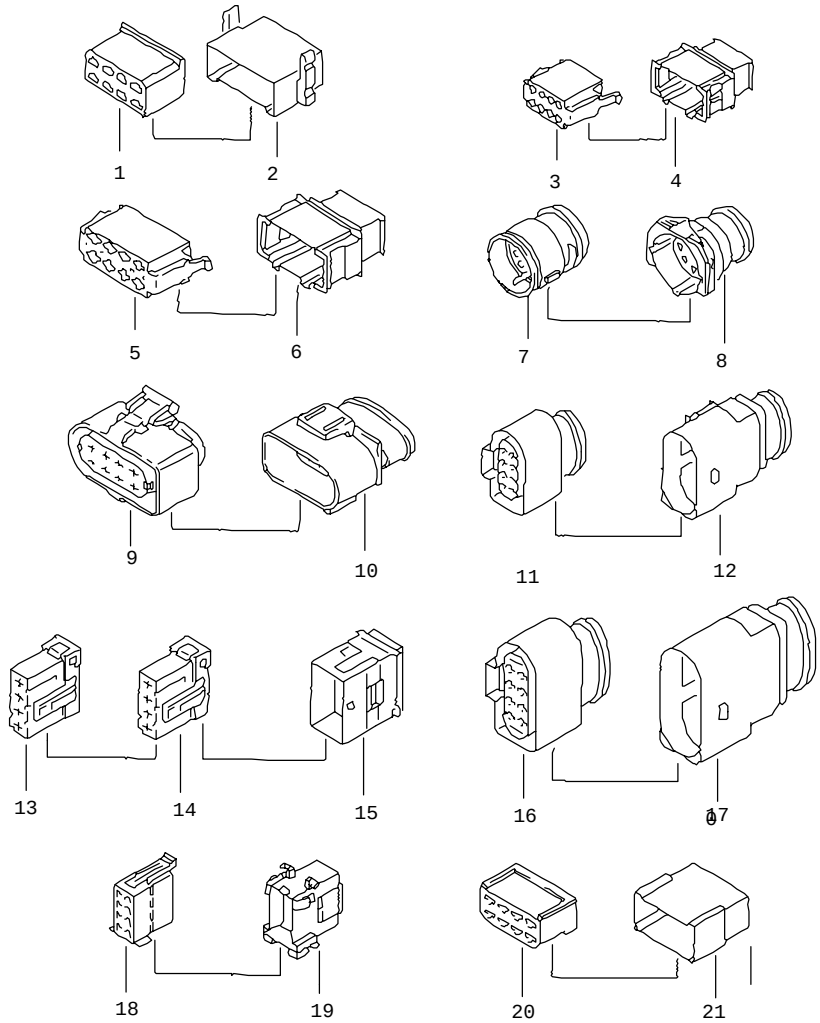

Pos	Part Number	Name	Remarks	Qty	Model
		connector housing	8 pin		
1	411 971 971	terminal pin housing		X	
		for single wiring:	000 979 107	X	1,0
			000 979 204	X	2,5
			000 979 402	X	6,0
2	411 971 973	flat connector housing		X	
		for single wiring:	000 979 104	X	1,0
			000 979 203	X	2,5
			000 979 409	X	6,0
3	1J0 972 724	flat contact housing with helper contact catch	8 pin black	1	PR-3L4
		for single wiring:	000 979 133	X	1,0
			000 979 133 A	X	1,0
(3)	191 972 724	flat contact housing		X	
		for single wiring:	000 979 133	X	1,0
			000 979 133 A	X	1,0
			000 979 217	X	2,5
(3)	3B0 972 724	flat contact housing with helper contact catch	8 pin	1	
		for single wiring:	000 979 131	X	1,0
			000 979 131 A	X	1,0
4	1J0 972 734	flat contact housing	8 pin	1	
		for single wiring:	000 979 134	X	1,0
			000 979 134 A	X	1,0.
(4)	191 972 734	flat contact housing		X	
		for single wiring:	000 979 129	X	1,0
			000 979 219	X	2,5
(4)	3B0 972 734	flat contact housing	8 pin	1	
		for single wiring:	000 979 132	X	1,0
			000 979 132 A	X	1,0
5	1J0 972 774	flat contact housing	8 pin	1	
		for single wiring:	000 979 135	3	1,0
			000 979 227	1	2,5
(5)	191 972 774	flat contact housing		X	
		for single wiring:	000 979 135	X	1,0
			000 979 227	X	2,5
			000 979 407	X	6,0
6	191 972 784	flat contact housing		X	
		for single wiring:	000 979 130	X	1,0
			000 979 219	X	2,5
			000 979 302	X	4,0

Pos	Part Number	Name	Remarks	Qty	Model
7	443 972 983	round connector housing		X	
		for single wiring:	000 979 118	X	1,0
			000 979 118 A	X	1,0
			000 979 215	X	2,5
			000 979 215 A	X	2,5
8	443 972 984	rd. connector sleeve housing	8 pin	X	
		for single wiring:	000 979 117	X	1,0
			000 979 117 A	X	1,0
			000 979 213	X	2,5
			000 979 213 A	X	2,5
9	3A0 973 734	flat contact housing		X	
		for single wiring:	000 979 133	X	1,0
			000 979 133 A	X	1,0
10	3A0 973 834	flat connector housing		X	
		for single wiring:	000 979 129	X	1,0
			000 979 129 A	X	1,0
11	1J0 973 714	flat contact housing	8 pin	1	
		for single wiring:	000 979 131	X	1,0
			000 979 131 A	X	1,0
12	1J0 973 814	flat contact housing	8 pin	1	
		for single wiring:	000 979 132	X	1,0
			000 979 132 A	X	1,0
13	3B0 937 713	flat contact housing with helper contact catch	4 pin black	1	
		as required use:	3B0 937 714	1	
		for single wiring:	000 979 131	X	1,0
			000 979 133	X	1,0
			000 979 133 A	X	1,0
14	3B0 937 714	flat contact housing with helper contact catch	4 pin black	1	
		as required use:	3B0 937 713	1	
		for single wiring:	000 979 131	X	1,0
			000 979 133	X	1,0
			000 979 133 A	X	1,0
15	3B0 937 741	flat connector housing with additional contact catch	8 pin black	1	
		for single wiring:	000 979 134	X	1,0
			000 979 134 A	X	1,0
			000 979 136	X	1,0
			000 979 216	X	2,5
			000 979 228	X	2,5
16	8D0 973 734	flat contact housing	8 pin black	1	
		for single wiring:	000 979 133	X	1,0
			000 979 133 A	X	1,0
			000 979 225	X	2,5
			000 979 225 A	X	2,5

Pos	Part Number	Name	Remarks	Qty	Model
17	8D0 973 834	flat contact housing	8 pin black	1	
		for single wiring:	000 979 134	X	1,0
			000 979 134 A	X	1,0
			000 979 226	X	2,5
			000 979 226 A	X	2,5
18	2D0 971 989 BN	flat contact housing	8 pin	1	
		for single wiring:	000 979 133	X	1,0
			000 979 225	X	2,5
19	2D0 971 989 CL	flat contact housing connecting piece additional heater	8 pin	1	
		for single wiring:	000 979 138	X	1,0
			000 979 233	X	2,5
20	2D0 971 989 CA	flat contact housing coupling piece loom for engine compartment	8 pin	1	
		for single wiring:	000 979 107	X	1,0
			000 979 204	X	2,5
			000 979 402	X	6,0
20	2D0 971 989 CA	flat contact housing coupling piece loom for engine compartment	8 pin	1	
		for single wiring:	000 979 107	X	1,0
			000 979 204	X	2,5
			000 979 402	X	6,0
21	2D0 971 989 J	flat contact housing	8 pin	1	

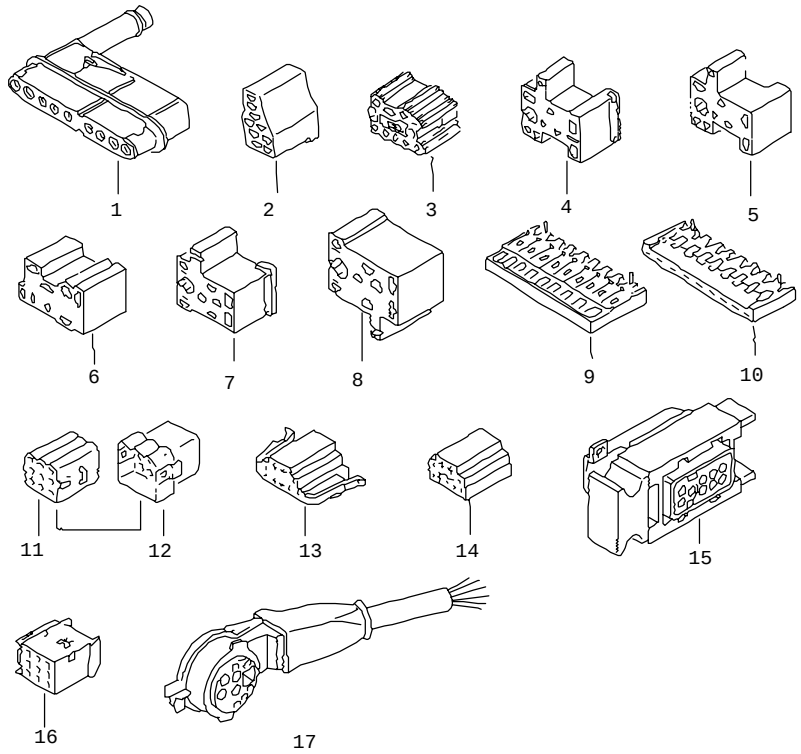

Pos	Part Number	Name	Remarks	Qty	Model
		connector housing	9 pin		
1	443 906 365 A	rd. connector sleeve housing		X	
		for contact:	443 972 982 A	X	0,2-1,5
			443 972 982 B	X	2,5-4,0
2	--- --- ---	no longer available		X	
3	857 971 942 E	flat contact housing		X	
		for single wiring:	000 979 133	X	1,0
			000 979 133 A	X	1,0
			000 979 135	X	1,0
			000 979 217	X	2,5
			000 979 227	X	2,5
			000 979 407	X	6,0
4	155 971 999	terminal pin housing		X	
		for single wiring:	000 979 133	X	1,0
			000 979 133 A	X	1,0
			000 979 135	X	1,0
			000 979 217	X	2,5
			000 979 227	X	2,5
			000 979 407	X	6,0
5	161 971 999	terminal pin housing		X	
		for single wiring:	000 979 105	X	1,0
			000 979 106	X	1,0
			000 979 107	X	1,0
			000 979 204	X	2,5
			000 979 402	X	6,0
6	811 972 999	terminal pin housing		X	
		for single wiring:	000 979 105	X	1,0
			000 979 106	X	1,0
			000 979 107	X	1,0
			000 979 204	X	2,5
			000 979 402	X	6,0
7	867 971 999 A	terminal pin housing		X	
		for single wiring:	000 979 133	X	1,0
			000 979 133 A	X	1,0
			000 979 135	X	1,0
			000 979 217	X	2,5
			000 979 227	X	2,5
			000 979 407	X	6,0
7	867 971 999 A	terminal pin housing		X	
		for single wiring:	000 979 133	X	1,0
			000 979 133 A	X	1,0
			000 979 135	X	1,0
			000 979 217	X	2,5
			000 979 227	X	2,5
			000 979 407	X	6,0

Pos	Part Number	Name	Remarks	Qty	Model
8	251 971 999 B	terminal pin housing		X	
		for single wiring:	000 979 105	X	1,0
			000 979 106	X	1,0
			000 979 107	X	2,5
			000 979 204	X	2,5
			000 979 402	X	6,0
9	191 972 550	spring contact housing (long)	black	X	
		for single wiring:	000 979 115	X	1,0
10	191 972 551	spring contact housing (short)	black	X	
		for single wiring:	000 979 115	X	1,0
11	433 959 771	rd. connector sleeve housing		X	
		for single wiring:	000 979 110	X	1,0
			000 979 211	X	2,5
			000 979 305	X	4,0
12	433 959 772	round connector housing		X	
		for single wiring:	000 979 111	X	1,0
			000 979 210	X	2,5
			000 979 304	X	4,0
13	1H4 972 709	flat contact housing		X	
		for single wiring:	000 979 133	X	1,0
			000 979 133 A	X	1,0
			000 979 217	X	2,5
14	3A0 972 709	flat contact housing	9 pin	1	
		for single wiring:	000 979 133	X	1,0
			000 979 133 A	X	1,0
			000 979 217	X	2,5
15	4B0 972 709	rd. connector sleeve housing	9 pin	X	
		for single wiring:	000 979 128	X	1,0
			000 979 221	X	2,5
16	4B0 906 971	flat contact housing	9 pin black	1	
		for single wiring:	000 979 133	X	1,0
			000 979 225	X	2,5
17	2D0 971 989 CM	flat contact housing connecting piece starter inhibitor switch for contact:	9 pin	1	

Pos	Part Number	Name	Remarks	Qty	Model

Model	Year	MG	SG	Illustration	VIN No.	Update	14:46	18.02.20100	ETKA
EL	90	9	71	971-40		336			

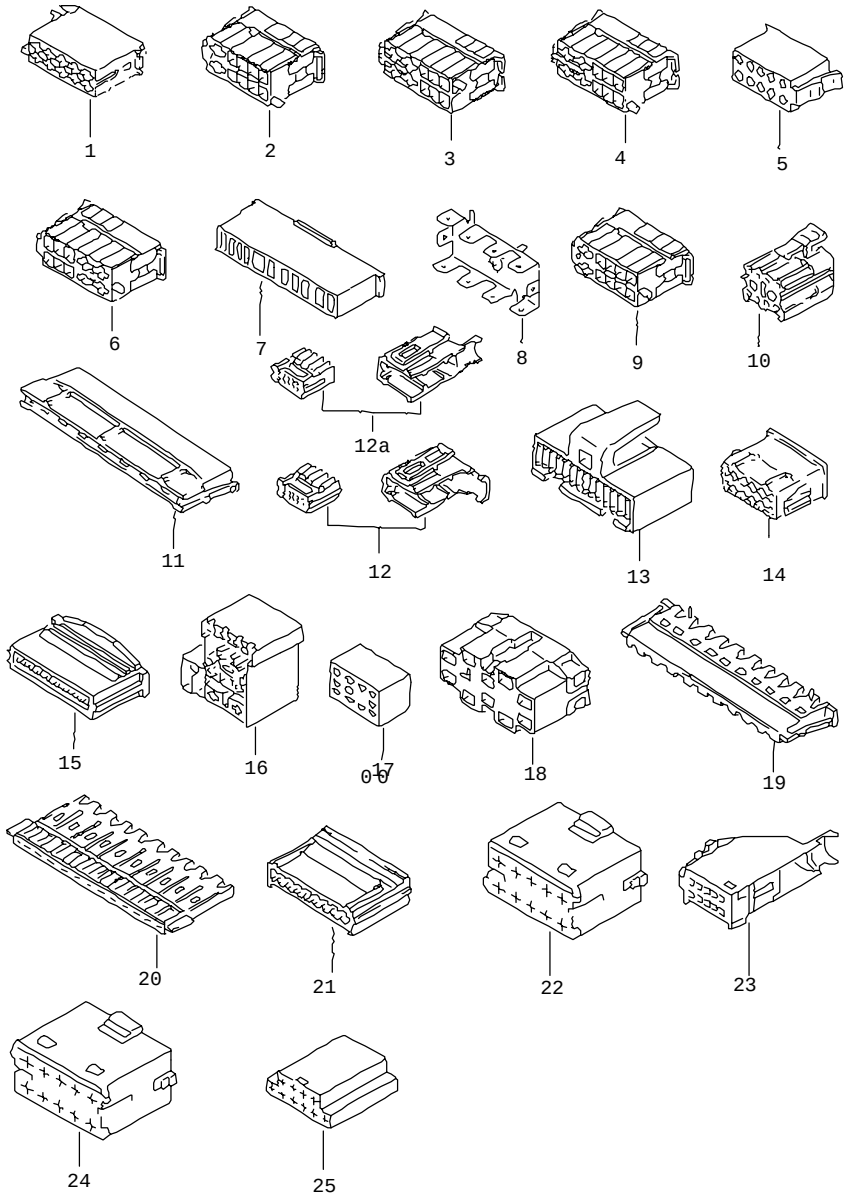

Pos	Part Number	Name	Remarks	Qty	Model
		connector housing	10 pin		
1	357 035 447 B	flat contact housing	red	X	
		for single wiring:	000 979 133	X	1,0
			000 979 133 A	X	1,0
			000 979 217	X	2,5
2	357 903 968	flat contact housing with helper contact catch		X	
		for single wiring:	000 979 133	X	1,0
			000 979 133 A	X	1,0
			000 979 135	X	1,0
			000 979 217	X	2,5
			000 979 227	X	2,5
			000 979 407	X	6,0
3	357 953 968	flat contact housing with helper contact catch		X	
		for single wiring:	000 979 133	X	1,0
			000 979 133 A	X	1,0
			000 979 135	X	1,0
			000 979 217	X	2,5
			000 979 227	X	2,5
			000 979 407	X	6,0
4	357 953 968 A	flat contact housing with helper contact catch		X	
		for single wiring:	000 979 133	X	1,0
			000 979 133 A	X	1,0
			000 979 135	X	1,0
			000 979 217	X	2,5
			000 979 227	X	2,5
			000 979 407	X	6,0
5	357 959 869 A	flat contact housing		X	
		for single wiring:	000 979 133	X	1,0
			000 979 133 A	X	1,0
			000 979 217	X	2,5
6	357 959 968 A	flat contact housing with helper contact catch		X	
		for single wiring:	000 979 133	X	1,0
			000 979 133 A	X	1,0
			000 979 135	X	1,0
			000 979 217	X	2,5
			000 979 227	X	2,5
			000 979 407	X	6,0
7	411 963 365 A	terminal pin housing		X	
		for single wiring:	000 979 105	X	1,0
			000 979 106	X	1,0
			000 979 107	X	1,0
			000 979 204	X	2,5
			000 979 402	X	6,0

Pos	Part Number	Name	Remarks	Qty	Model
8	191 971 519	ground connector	6,3 10 point	X	
9	357 971 968 C	flat contact housing with helper contact catch for single wiring:		X	
			000 979 133	X	1,0
			000 979 133 A	X	1,0
			000 979 135	X	1,0
			000 979 217	X	2,5
			000 979 227	X	2,5
			000 979 407	X	6,0
10	171 971 971 T	rd. connector sleeve housing for single wiring:	yellow	X	
			000 979 108	X	1,0
			000 979 110	X	1,0
			000 979 208	X	2,5
			000 979 211	X	2,5
			000 979 305	X	4,0
11	811 971 977	flat contact housing for single wiring:		X	
			000 979 135	X	1,0
			000 979 227	X	2,5
			000 979 407	X	6,0
12	443 971 980 B	flat contact housing with cap for single wiring:	black	X	
			000 979 003 A	X	0,5
12A	8D0 972 980	flat contact housing with cap for single wiring:	10 pin black	1	
			000 979 003 A	X	0,5
13	443 971 983	spring contact housing for contact:		X	
			443 971 937 A	X	0,5-1,5
14	893 971 983	flat contact housing for single wiring:		X	
			000 979 133	X	1,0
			000 979 133 A	X	1,0
			000 979 217	X	2,5
15	113 971 998 A	spring contact housing for single wiring:		X	
			000 979 102	X	1,0
16	--- --- ---	no longer available		X	
17	823 971 999	terminal pin housing for single wiring:		X	
			000 979 105	X	1,0
			000 979 106	X	1,0
			000 979 107	X	1,0
18	191 971 999 C	flat contact housing for single wiring:		X	
			000 979 135	X	1,0
			000 979 227	X	2,5
			000 979 407	X	6,0

Pos	Part Number	Name	Remarks	Qty	Model
19	811 972 534 H	spring contact housing (short) for single wiring:		X	
			000 979 115	X	1,0
20	811 972 538 H	spring contact housing (long) for single wiring:		X	
			000 979 115	X	1,0
21	443 972 956	spring contact housing for single wiring:		X	
			000 979 116	X	1,0
22	2D0 971 989 AJ	flat contact housing switch for power take-off for single wiring:	10 pin	1	
			000 979 126	X	1,0
			000 979 133	X	1,0
			000 979 217	X	2,5
			000 979 225	X	2,5
23	8L0 972 980	flat contact housing with helper contact catch for single wiring:	10 pin	X	
			000 979 003 A	X	0,5
24	2D0 971 989 AH	flat contact housing switch rotating warning light for single wiring:	10 pin	1	
			000 979 217	X	2,5
25	7M0 972 710	flat contact housing for single wiring:	10 pin	1	
			000 979 131	X	1,0

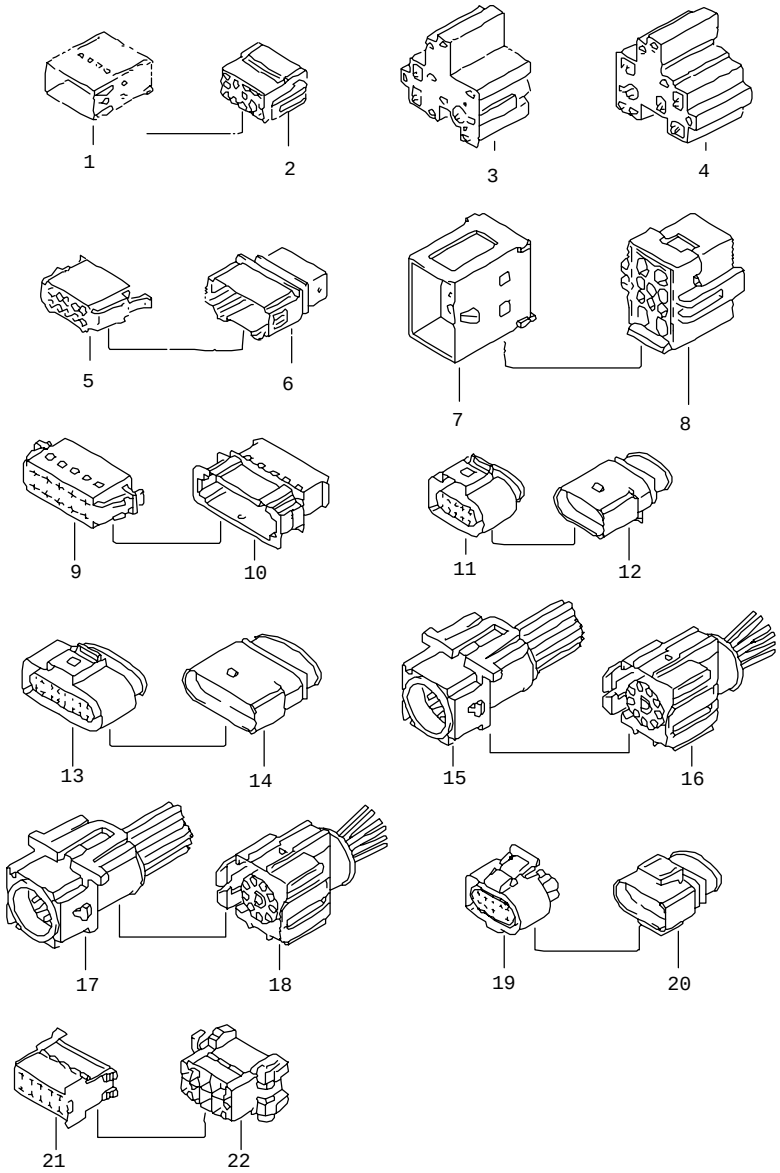

Pos	Part Number	Name	Remarks	Qty	Model
		connector housing	10 pin		
1	893 971 977	flat connector housing		X	
		for single wiring:	000 979 103	X	1,0
			000 979 104	X	1,0
			000 979 203	X	2,5
			000 979 409	X	6,0
2	893 971 982	terminal pin housing		X	
		for single wiring:	000 979 133	X	1,0
			000 979 133 A	X	1,0
			000 979 135	X	1,0
			000 979 217	X	2,5
			000 979 227	X	2,5
			000 979 407	X	6,0
3	251 971 999 C	terminal pin housing		X	
		for single wiring:	000 979 133	X	1,0
			000 979 133 A	X	1,0
			000 979 135	X	1,0
			000 979 217	X	2,5
			000 979 227	X	2,5
			000 979 407	X	6,0
4	867 971 999 C	terminal pin housing		X	
		for single wiring:	000 979 133	X	1,0
			000 979 133 A	X	1,0
			000 979 135	X	1,0
			000 979 217	X	2,5
			000 979 227	X	2,5
			000 979 407	X	6,0
5	1J0 972 725	terminal pin housing	10 pin	1	
		for single wiring:	000 979 133	X	1,0
			000 979 133 A	X	1,0
			000 979 225	X	2,5
(5)	191 972 725	terminal pin housing		X	
		for single wiring:	000 979 133	X	1,0
			000 979 133 A	X	1,0
			000 979 217	X	2,5
6	191 972 735	terminal pin housing		X	
		for single wiring:	000 979 105	X	1,0
			000 979 106	X	1,0
6	191 972 735	terminal pin housing		X	
		for single wiring:	000 979 105	X	1,0
			000 979 106	X	1,0
7	8A0 972 985	round connector housing		X	
		for single wiring:	000 979 118	X	1,0
			000 979 119	X	1,0
			000 979 123	X	1,0
			000 979 215	X	2,5
			000 979 216	X	2,5

Pos	Part Number	Name	Remarks	Qty	Model
8	8A0 972 986	rd. connector sleeve housing		X	
		for single wiring:	000 979 117	X	1,0
			000 979 122	X	1,0
			000 979 213	X	2,5
(7)	1J0 937 733	flat contact housing with	10 pin	1	
		helper contact catch	black		
		to be used for:	violet		
			green		
		for single wiring:	000 979 131	X	1,0
			000 979 131 A	X	1,0
			000 979 133	X	1,0
			000 979 133 A	X	1,0
			000 979 225	X	2,5
			000 979 225 A	X	2,5
			000 979 227	X	2,5
(8)	1J0 937 743	flat connector housing with	10 pin	1	
		additional contact catch	black		
		to be used for:	violet		
			green		
		for single wiring:	000 979 132	X	1,0
			000 979 132 A	X	1,0
			000 979 134	X	1,0
			000 979 134 A	X	1,0
			000 979 226	X	2,5
			000 979 226 A	X	2,5
			000 979 228	X	2,5
(7)	1J0 937 733 A	flat contact housing with	10 pin	1	
		helper contact catch	brown		
		to be used for:	grey		
		for single wiring:	000 979 131	X	1,0
			000 979 131 A	X	1,0
			000 979 133	X	1,0
			000 979 133 A	X	1,0
			000 979 225	X	2,5
			000 979 225 A	X	2,5
			000 979 227	X	2,5
(8)	1J0 937 743 A	flat connector housing with	10 pin	1	
		additional contact catch	brown		
		to be used for:	grey		
		for single wiring:	000 979 132	X	1,0
			000 979 132 A	X	1,0
			000 979 134	X	1,0
			000 979 134 A	X	1,0
			000 979 226	X	2,5
			000 979 226 A	X	2,5
			000 979 228	X	2,5
(7)	1J0 937 733 B	flat contact housing with	10 pin	1	
		helper contact catch	red		
		to be used for:	light green		
			white		
		for single wiring:	000 979 131	X	1,0
			000 979 131 A	X	1,0
			000 979 133	X	1,0
			000 979 133 A	X	1,0
			000 979 225	X	2,5
			000 979 225 A	X	2,5
			000 979 227	X	2,5
(8)	1J0 937 743 B	flat connector housing with	10 pin	1	

Pos	Part Number	Name	Remarks	Qty	Model
		additional contact catch	red		
		to be used for:	light green		
			white		
		for single wiring:	000 979 132	X	1,0
			000 979 132 A	X	1,0
			000 979 134	X	1,0
			000 979 134 A	X	1,0
			000 979 226	X	2,5
			000 979 226 A	X	2,5
			000 979 228	X	2,5
(8)	1J0 937 743 B	flat connector housing with	10 pin	1	
		additional contact catch	red		
		to be used for:	light green		
			white		
		for single wiring:	000 979 132	X	1,0
			000 979 132 A	X	1,0
			000 979 134	X	1,0
			000 979 134 A	X	1,0
			000 979 226	X	2,5
			000 979 226 A	X	2,5
			000 979 228	X	2,5
(7)	1J0 937 733 D	flat contact housing with	10 pin	1	
		helper contact catch	blue		
		to be used for:	dark brown		
			light pink		
			orange		
		for single wiring:	000 979 131	X	1,0
			000 979 131 A	X	1,0

Pos	Part Number	Name	Remarks	Qty	Model
			000 979 133	X	1,0
			000 979 133 A	X	1,0
			000 979 225	X	2,5
			000 979 225 A	X	2,5
			000 979 227	X	2,5
(8)	1J0 937 743 D	flat connector housing with	10 pin	1	
		additional contact catch	blue		
		to be used for:	dark brown		
			light pink		
			orange		
		for single wiring:	000 979 132	X	1,0
			000 979 132 A	X	1,0
			000 979 134	X	1,0
			000 979 134 A	X	1,0
			000 979 226	X	2,5
			000 979 226 A	X	2,5
			000 979 228	X	2,5
9	1J0 972 775	flat contact housing	10 pin	1	
		for single wiring:	000 979 135	X	1,0
			000 979 227	X	2,5
(9)	7D0 972 775	flat contact housing	10 pin	1	
		for single wiring:	000 979 133		1,0
			000 979 133 A		1,0
			000 979 133 AB		1,0
			000 979 225		2,5
			000 979 225 A		2,5
10	1J0 972 785	flat contact housing	10 pin	1	
		for single wiring:	000 979 136	X	1,0
			000 979 228	X	2,5
11	1J0 973 715	flat contact housing	10 pin	1	
		for single wiring:	000 979 131	X	1,0
			000 979 131 A	X	1,0
12	6X0 973 815	flat contact housing	10 pin	1	
		for single wiring:	000 979 132	X	1,0
			000 979 132 A	X	1,0

Pos	Part Number	Name	Remarks	Qty	Model
13	1J0 973 735	flat contact housing	10 pin	1	
		for single wiring:	000 979 131	X	1,0
			000 979 133	X	1,0
			000 979 133 A	X	1,0
			000 979 225	X	2,5
			000 979 225 A	X	2,5
14	1J0 973 835	flat contact housing	10 pin	1	
		for single wiring:	000 979 134	X	1,0
			000 979 136	X	1,0
			000 979 225	X	2,5
15	2TA 973 110	round connector housing	10 pin white	1	L 80
16	2TA 973 120 A	cylindrical connector with retaining lug	10 pin white	1	L 80
17	2TA 973 110 A	round connector housing	10 pin black	1	L 80
18	2TA 973 120	cylindrical connector with retaining lug	10 pin black	1	L 80
19	3A0 973 715	flat contact housing		X	
		for single wiring:	000 979 131	X	1,0
			000 979 131 A	X	1,0
20	3A0 973 815	flat contact housing	10 pin	1	
		for single wiring:	000 979 132	X	1,0
21	2D0 971 989 BP	flat contact housing	10 pin	1	
		for single wiring:	000 979 133	X	1,0
			000 979 225	X	2,5
22	2D0 971 989 DG	flat contact housing	10 pin	1	
		for single wiring:	000 979 134	X	1,0
			000 979 226	X	2,5

Pos	Part Number	Name	Remarks	Qty	Model

Model	Year	MG	SG	Illustration	VIN No.	Update	14:48	18.02.20100	ETKA
EL	90	9	71	971-50		336			

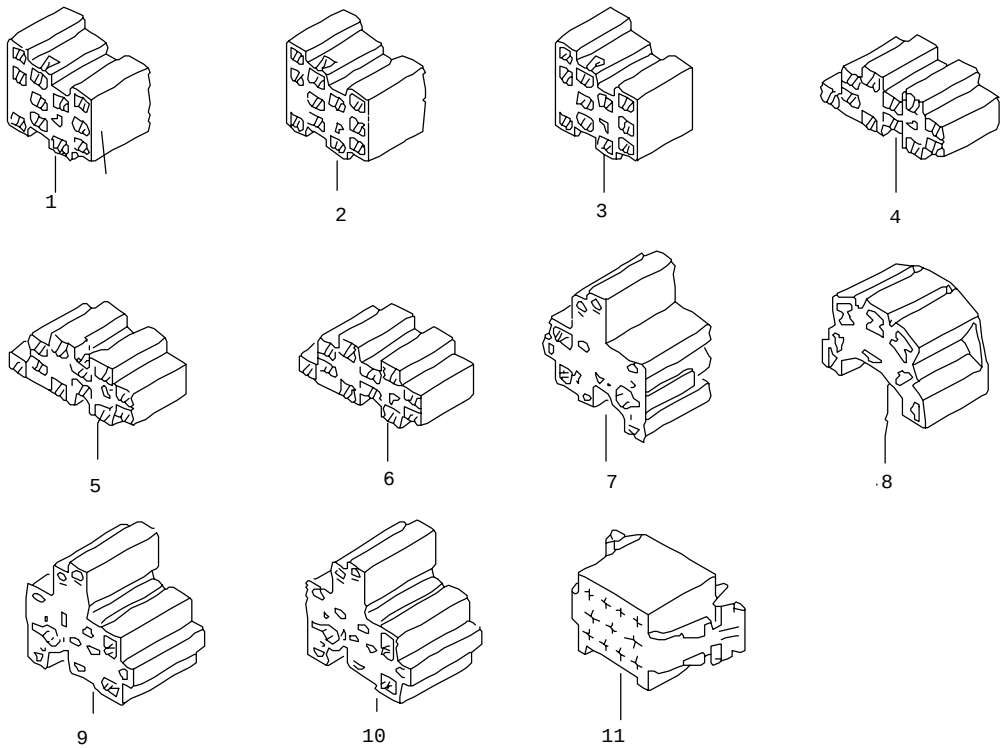

Pos	Part Number	Name	Remarks	Qty	Model
		connector housing	11 pin		
1	357 971 999 B	flat contact housing		X	
		for single wiring:	000 979 135	X	1,0
			000 979 227	X	2,5
			000 979 407	X	6,0
2	357 971 999 C	flat contact housing		X	
		for single wiring:	000 979 135	X	1,0
			000 979 227	X	2,5
			000 979 407	X	6,0
3	357 971 999 D	flat contact housing		X	
		for single wiring:	000 979 135	X	1,0
			000 979 227	X	2,5
			000 979 407	X	6,0
4	535 971 999	terminal pin housing		X	
		for single wiring:	000 979 135	X	1,0
			000 979 227	X	2,5
			000 979 407	X	6,0
5	535 971 999 A	terminal pin housing		X	
		for single wiring:	000 979 135	X	1,0
			000 979 227	X	2,5
			000 979 407	X	6,0
6	535 971 999 B	terminal pin housing		X	
		for single wiring:	000 979 135	X	1,0
			000 979 227	X	2,5
			000 979 407	X	6,0
7	251 971 999 D	terminal pin housing		X	
		for single wiring:	000 979 133	X	1,0
			000 979 133 A	X	1,0
			000 979 135	X	1,0
			000 979 217	X	2,5
			000 979 227	X	2,5
			000 979 407	X	6,0
8	823 972 999	terminal pin housing		X	
		for single wiring:	000 979 107	X	1,0
			000 979 204	X	2,5
			000 979 402	X	6,0
9	867 971 999 B	terminal pin housing		X	
		for single wiring:	000 979 133	X	1,0
			000 979 133 A	X	1,0
			000 979 135	X	1,0
			000 979 217	X	2,5
			000 979 227	X	2,5
			000 979 407	X	6,0

Pos	Part Number	Name	Remarks	Qty	Model
10	867 971 999 D	terminal pin housing		X	
		for single wiring:	000 979 133	X	1,0
			000 979 133 A	X	1,0
			000 979 135	X	1,0
			000 979 217	X	2,5
			000 979 227	X	2,5
			000 979 407	X	6,0
11	7M0 953 631	flat contact housing	11 pin	1	
		for single wiring:	000 979 133	X	1,0
			000 979 133 A	X	1,0
			000 979 225	X	2,5
			000 979 225 A	X	2,5

Pos	Part Number	Name	Remarks	Qty	Model

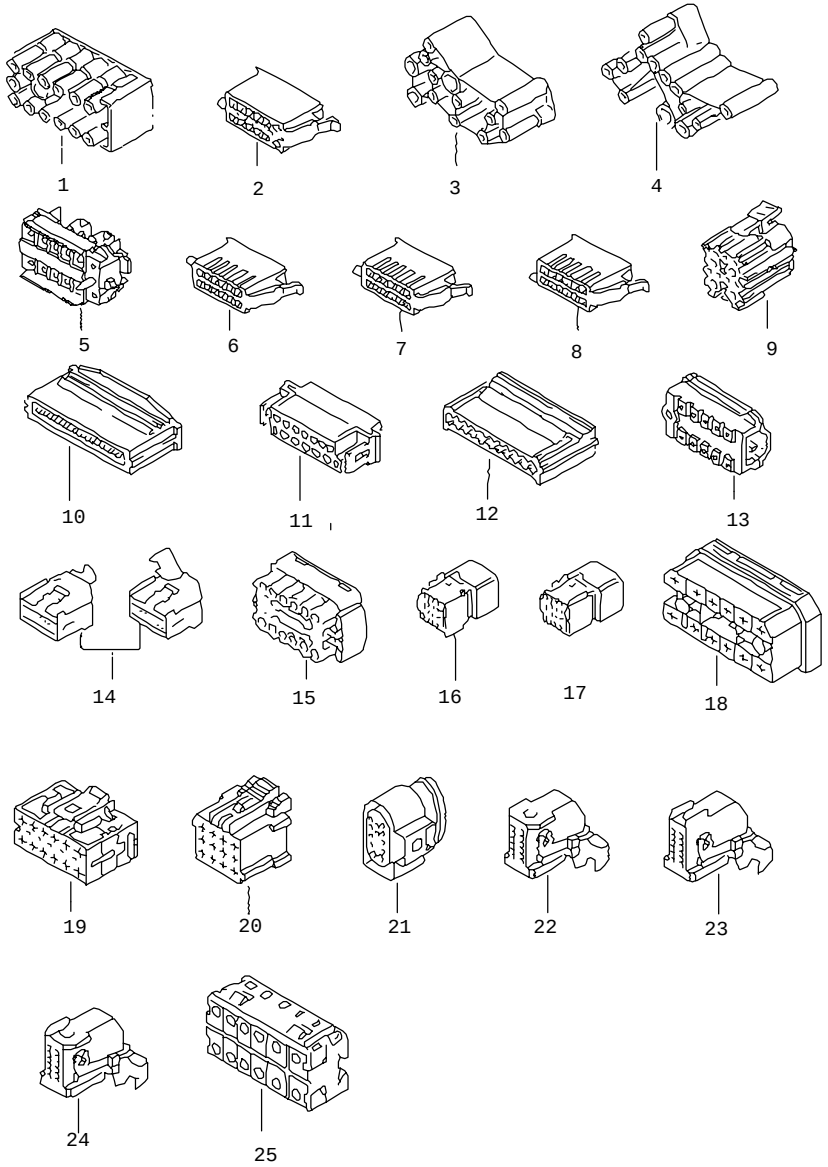

Pos	Part Number	Name	Remarks	Qty	Model
		connector housing	12 pin		
1	--- --- ---	no longer available		X	
		for single wiring:	000 979 108	X	1,0
			000 979 208	X	2,5
2	357 945 968	flat contact housing with helper contact catch		X	
		for single wiring:	000 979 133	X	1,0
			000 979 133 A	X	1,0
			000 979 135	X	1,0
			000 979 217	X	2,5
			000 979 227	X	2,5
			000 979 407	X	6,0
3	431 953 525	rd. connector sleeve housing		X	
		for single wiring:	000 979 108	X	1,0
			000 979 110	X	1,0
			000 979 208	X	2,5
			000 979 211	X	2,5
			000 979 305	X	4,0
4	--- --- ---	no longer available		X	
		for single wiring:	000 979 108	X	1,0
			000 979 110	X	1,0
			000 979 208	X	2,5
			000 979 211	X	2,5
			000 979 305	X	4,0
5	251 963 098	round connector housing		X	
6	357 971 967	flat contact housing with helper contact catch		X	
		for single wiring:	000 979 133	X	1,0
			000 979 133 A	X	1,0
			000 979 217	X	2,5
7	357 971 967 A	flat contact housing with helper contact catch		X	
		for single wiring:	000 979 133	X	1,0
			000 979 133 A	X	1,0
			000 979 217	X	2,5
8	357 971 968 B	flat contact housing with helper contact catch		X	
		for single wiring:	000 979 133	X	1,0
			000 979 133 A	X	1,0
			000 979 217	X	2,5
9	171 971 971 S	rd. connector sleeve housing	yellow	X	
		for single wiring:	000 979 108	X	1,0
			000 979 110	X	1,0
			000 979 208	X	2,5
			000 979 211	X	2,5
			000 979 305	X	4,0

Pos	Part Number	Name	Remarks	Qty	Model
10	171 971 998 L	spring contact housing		X	
		for single wiring:	000 979 102	X	1,0
11	443 972 523 A	terminal pin housing		X	
		for single wiring:	000 979 133	X	1,0
			000 979 133 A	X	1,0
			000 979 217	X	2,5
12	443 972 957	spring contact housing		X	
		for single wiring:	000 979 116	X	1,0
13	443 972 918 A	rd. connector sleeve housing		X	
		for contact:	443 972 982 D	X	
14	4A0 972 883	flat contact housing		X	
		for single wiring:	000 979 003 A	X	0,5
15	701 972 961	rd. connector sleeve housing		X	
		for single wiring:	000 979 128	X	1,0
			000 979 221	X	2,5
16	4A0 972 805 B	flat contact housing with cap	12 pin black	1	
		connecting piece			
		electronic control unit	E		
		for single wiring:	000 979 006	X	0,5
			000 979 121	X	1.0
			000 979 223	X	1,5
17	4A0 972 805 C	flat contact housing with cap	12 pin brown	1	
		connecting piece			
		electronic control unit	D		
		for single wiring:	000 979 006	X	0,5
			000 979 121	X	1.0
			000 979 223	X	1,5
18	8L0 971 978	flat connector housing	12 pin	1	
		for single wiring:	000 979 126	X	1,0
			000 979 135	X	1,0
			000 979 227	X	2,5
19	4B0 973 721	flat contact housing	12 pin	X	
		for single wiring:	000 979 133	X	1,0
			000 979 225	X	2,5
			000 979 227	X	2,5
20	7D0 963 997	flat contact housing control unit for anti-theft device	12 pin	1	
		for single wiring:	000 979 133		1,0
			000 979 133 A		1,0
			000 979 225		2,5
			000 979 225 A		2,5

Pos	Part Number	Name	Remarks	Qty	Model
21	8L0 972 710	flat contact housing with helper contact catch	12 pin	1	
		for single wiring:	000 979 131	X	1,0
			000 979 131 A	X	1,0
			000 979 133	X	1,0
			000 979 133 A	X	1,0
			000 979 225	X	2,5
			000 979 225 A	X	2,5
22	2D0 972 883	flat contact housing with cap	12 pin black	1	
		for single wiring:			
23	2D0 972 883 A	flat contact housing with cap	12 pin black/white	1	
		for single wiring:			
24	2D0 972 883 B	flat contact housing with cap	12 pin black/blue	1	
		for single wiring:			
25	2D0 971 989 CG	flat contact housing	12 pin	1	
		for contact:	2D0 972 982 F		
-	1J0 941 165	flat contact housing	12 pin	1	
		for single wiring:	000 979 131	X	1,0
			000 979 131 A	X	1,0
			000 979 225	X	2,5
			000 979 225 A	X	2,5
-	8D0 972 712	flat connector housing interior light	12 pin	1	
		for single wiring:	000 979 003	X	0,5

Model	Year	MG	SG	Illustration	VIN No.	Update	14:48	18.02.20100	ETKA
EL	90	9	71	971-65		336			

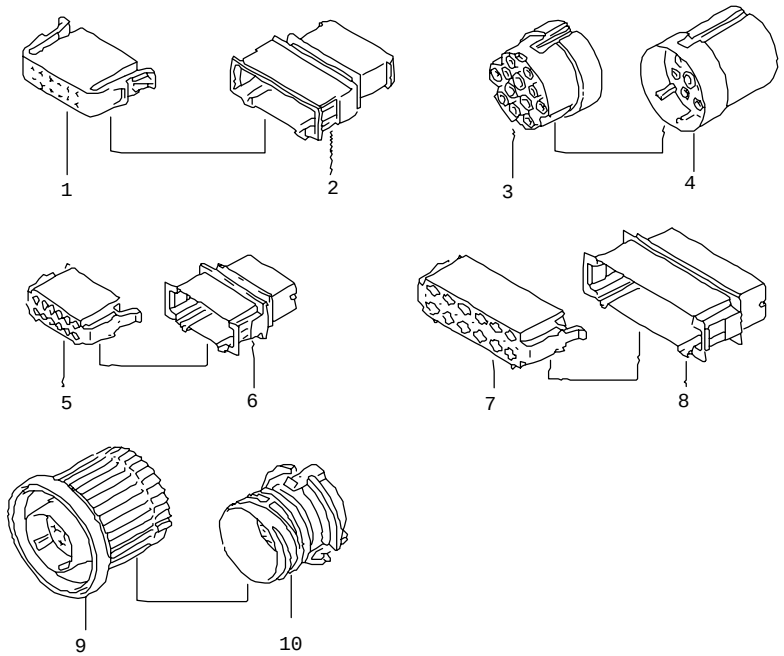

Pos	Part Number	Name	Remarks	Qty	Model
		connector housing	12 pin		
1	3B0 972 726	flat contact housing	12 pin	1	
		for single wiring:	000 979 131	X	1,0
			000 979 131 A	X	1,0
(1)	535 972 726	flat contact housing	12 pin	1	
		for single wiring:	000 979 131	X	1,0
			000 979 131 A	X	1,0
2	3B0 972 736	flat contact housing	12 pin	1	
		for single wiring:	000 979 132	X	1,0
			000 979 132 A	X	1,0
(2)	535 972 736	flat contact housing	12 pin	X	
		for single wiring:	000 979 132	X	1,0
			000 979 132 A	X	1,0
3	861 972 523	rd. connector sleeve housing		X	
		for single wiring:	000 979 108	X	1,0
			000 979 110	X	1,0
			000 979 208	X	2,5
			000 979 211	X	2,5
			000 979 305	X	4,0
4	861 972 524	round connector housing		X	
		for single wiring:	000 979 109	X	1,0
			000 979 111	X	1,0
			000 979 209	X	2,5
			000 979 210	X	2,5
			000 979 304	X	4,0
5	1J0 972 726	flat contact housing with helper contact catch	12 pin black	1	PR-3L4
		for single wiring:	000 979 133	X	1,0
			000 979 133 A	X	1,0
(5)	191 972 726	terminal pin housing		X	
		for single wiring:	000 979 133	X	1,0
			000 979 133 A	X	1,0
			000 979 217	X	2,5
6	191 972 736	terminal pin housing			
		for single wiring:	000 979 129	X	1,0
			000 979 219	X	2,5
6	191 972 736	terminal pin housing			
		for single wiring:	000 979 129	X	1,0
			000 979 219	X	2,5
7	191 972 776	flat contact housing		X	
		for single wiring:	000 979 135	X	1,0
			000 979 227	X	2,5
			000 979 407	X	6,0

Pos	Part Number	Name	Remarks	Qty	Model
8	191 972 786	flat contact housing		X	
		for single wiring:	000 979 130	X	1,0
			000 979 219	X	2,5
			000 979 302	X	4,0
9	1H0 973 103 C	flat connector housing		X	
		for single wiring:	000 979 131 A	X	1,0
			000 979 133	X	1,0
			000 979 133 A	X	1,0
			000 979 135	X	1,0
			000 979 217	X	2,5
			000 979 227	X	2,5
			000 979 407	X	6,0
10	1H0 973 131 C	flat connector housing		X	
		for single wiring:	000 979 132	X	1,0
			000 979 129	X	1,0
			000 979 130	X	1,0
			000 979 219	X	2,5
			000 979 220	X	2,5
			000 979 302	X	4,0

Pos	Part Number	Name	Remarks	Qty	Model

Model	Year	MG	SG	Illustration	VIN No.	Update	14:49	18.02.20100	ETKA
EL	90	9	71	971-70		336			

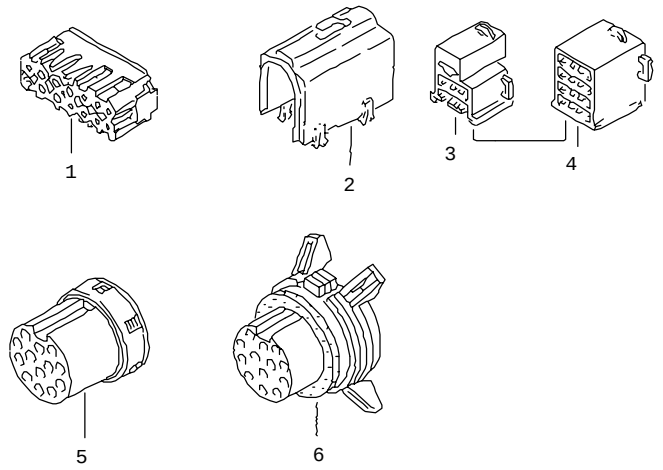

Pos	Part Number	Name	Remarks	Qty	Model
		connector housing	13 pin		
1	443 971 978	rd. connector sleeve housing		X	
		for single wiring:	000 979 117	X	1,0
			000 979 213	X	2,5
			000 979 214	X	2,5
			000 979 301	X	4,0
2	443 972 961 A	protective cap		X	
3	443 972 961	flat contact housing		X	
		for single wiring:	000 979 135	X	1,0
			000 979 227	X	2,5
			000 979 407	X	6,0
			000 979 408	X	6,0
4	443 972 961 B	flat contact housing		X	
		for single wiring:	000 979 135	X	1,0
			000 979 227	X	2,5
			000 979 407	X	6,0
5	8A0 971 978	rd. connector sleeve housing		1	
		for contact:	8A0 972 980 A	X	
6	7M0 971 946	rd. connector sleeve housing	13 pin	1	
		for contact:	8A0 972 980 A	X	

Model	Year	MG	SG	Illustration	VIN No.	Update	14:49	18.02.20100	ETKA
EL	90	9	71	971-75		336			

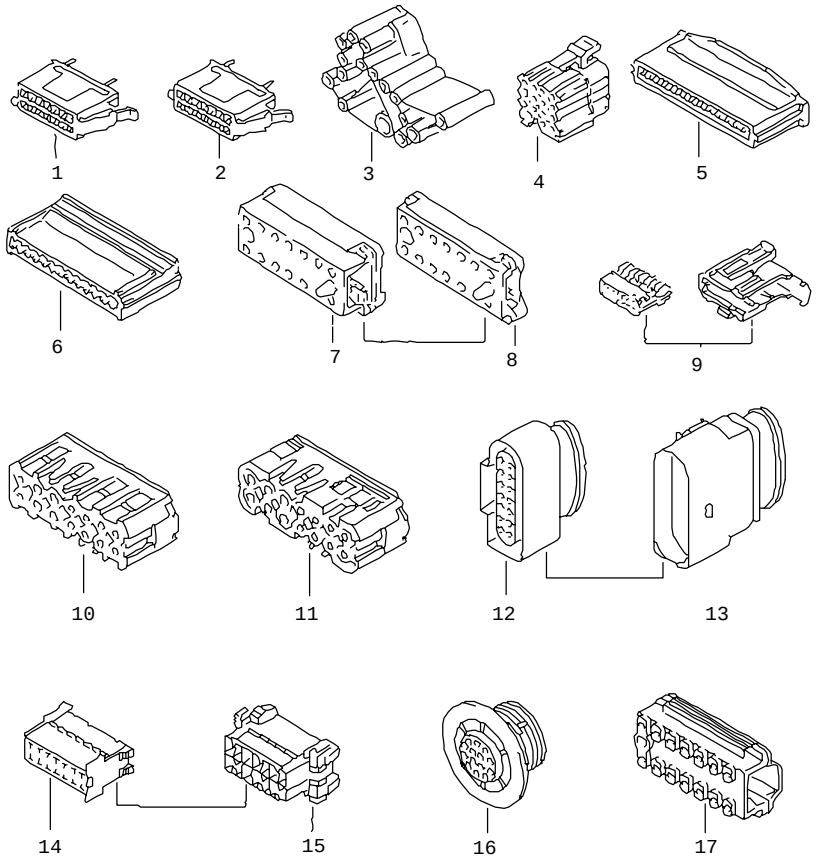

Pos	Part Number	Name	Remarks	Qty	Model
		connector housing	14 pin		
1	357 919 971 C	flat contact housing		X	
		for single wiring:	000 979 133	X	1,0
			000 979 133 A	X	1,0
			000 979 217	X	2,5
2	357 919 971 D	flat contact housing		X	
		for single wiring:	000 979 133	X	1,0
			000 979 133 A	X	1,0
			000 979 217	X	2,5
3	443 953 526 A	rd. connector sleeve housing		X	
		for single wiring:	000 979 108	X	1,0
			000 979 110	X	1,0
			000 979 208	X	2,5
			000 979 211	X	2,5
			000 979 305	X	4,0
4	171 971 971 R	rd. connector sleeve housing		X	
		for single wiring:	000 979 108	X	1,0
			000 979 110	X	1,0
			000 979 208	X	2,5
			000 979 211	X	2,5
			000 979 305	X	4,0
5	321 971 998	spring contact housing		X	
		for single wiring:	000 979 102	X	1,0
6	443 972 958	spring contact housing		X	
		for single wiring:	000 979 116	X	1,0
			000 979 116 A	X	1,0
7	447 972 917	round connector sleeve housing with contact and code pin		X	
		for contact:	447 972 979	X	
8	447 972 918	round connector housing with contact lock		X	
		for contact:	447 972 982	X	
9	443 972 959	flat contact housing	black	X	
		for single wiring:	000 979 003 A	X	0,5
10	4A0 971 978	rd. connector sleeve housing	black/pink	X	
		for single wiring:	000 979 117	X	1,0
			000 979 213	X	2,5
			000 979 214	X	2,5
			000 979 301	X	4,0
11	4D0 971 978	flat connector housing	14 pin	1	
		for single wiring:	000 979 117	X	1,0
			000 979 213	X	2,5
			000 979 214	X	2,5
			000 979 301	X	4,0

Pos	Part Number	Name	Remarks	Qty	Model
12	6X0 973 717	flat contact housing	14 pin black	1	
		for single wiring:	000 979 131	X	1,0
			000 979 131 A	X	1,0
(12)	6X0 973 717 A	flat contact housing	14 pin brown	1	
		for single wiring:	000 979 131	X	1,0
			000 979 131 A	X	1,0
(12)	1J0 973 737	flat contact housing	14 pin	1	
		for single wiring:	000 979 131	X	1,0
			000 979 133	X	1,0
			000 979 225	X	2,5
13	6X0 973 817	flat contact housing	14 pin	1	
		for single wiring:	000 979 132	X	1,0
			000 979 132 A	X	1,0
(13)	6X0 973 817 A	flat contact housing	14 pin brown	1	
		for single wiring:	000 979 132	X	1,0
			000 979 132 A	X	1,0
(13)	1J0 973 837	flat contact housing helper contact catch	14 pin	1	
		for single wiring:	000 979 132	X	1,0
			000 979 132 A	X	1,0
			000 979 134	X	1,0
			000 979 134 A	X	1,0
			000 979 226	X	2,5
			000 979 226 A	X	2,5
14	2D0 971 989 AM	flat connector housing	14 pin	1	
15	2D0 971 989 BG	flat connector housing connecting piece rear view mirror	14 pin	1	
16	2D0 971 989 AR	round connector housing for diagnosis plug	14 pin	1	
17	2D0 971 989 CR	flat contact housing connecting piece control unit for cruise control system	14 pin	1	
		for contact:	2D0 972 982 A		

Pos	Part Number	Name	Remarks	Qty	Model

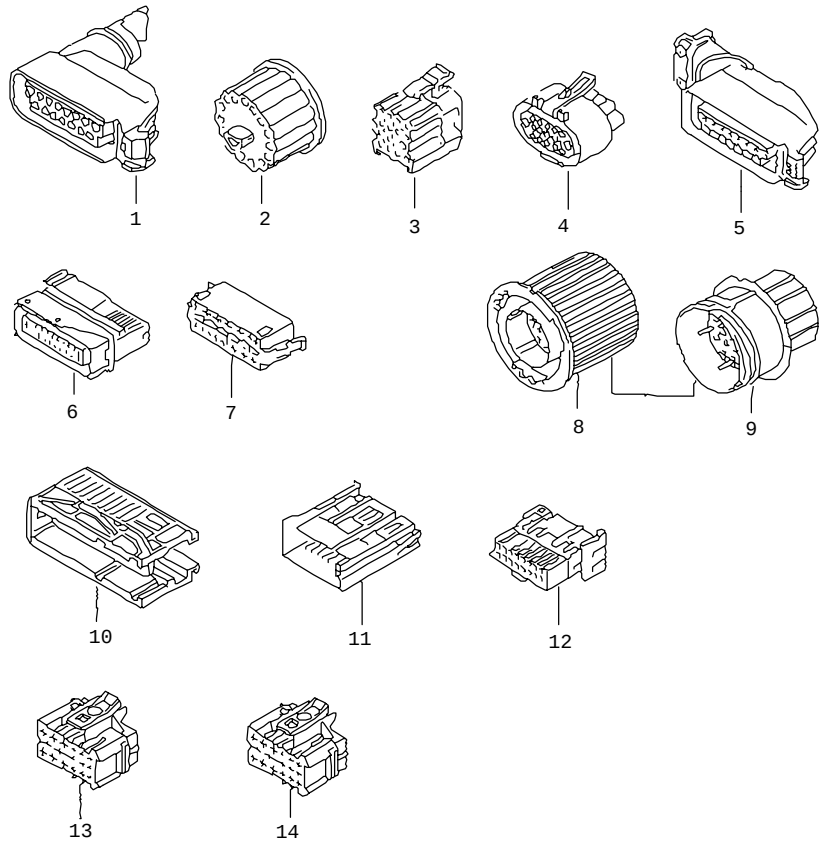

Pos	Part Number	Name	Remarks	Qty	Model
		connector housing	15 pin		
1	871 906 365	flat contact housing with gasket		X	
		for single wiring:	000 979 133	X	1,0
			000 979 133 A	X	1,0
			000 979 217	X	2,5
2	803 971 509	rd. connector sleeve housing		X	
		for single wiring:	000 979 108	X	1,0
			000 979 208	X	2,5
3	171 971 971 P	rd. connector sleeve housing		X	
		for single wiring:	000 979 108	X	1,0
			000 979 110	X	1,0
			000 979 208	X	2,5
			000 979 211	X	2,5
			000 979 305	X	4,0
4	357 973 215	flat contact housing		X	
		for single wiring:	000 979 131	X	1,0
		connecting piece	000 979 131 A	X	1,0
		wiring harness for	000 979 133	X	1,0
		transistorized ignition system	000 979 133 A	X	1,0
			000 979 217	X	2,5
5	533 906 365	flat contact housing with gasket		X	
		for single wiring:	000 979 133	X	1,0
			000 979 133 A	X	1,0
			000 979 217	X	2,5
6	1H0 959 381	flat contact housing		X	
		for single wiring:	000 979 131	X	1,0
			000 979 131 A	X	1,0
			000 979 133	X	1,0
			000 979 133 A	X	1,0
			000 979 217	X	2,5
7	7D1 971 999	flat contact housing	15 pin black	1	
		for single wiring:	000 979 135	X	1,0
			000 979 133	X	1,0
			000 979 217	X	2,5
			000 979 227	X	2,5
7	7D1 971 999	flat contact housing	15 pin black	1	
		for single wiring:	000 979 135	X	1,0
			000 979 133	X	1,0
			000 979 217	X	2,5
			000 979 227	X	2,5

Pos	Part Number	Name	Remarks	Qty	Model
(7)	7D2 971 999	flat contact housing	15 pin brown	1	
		for single wiring:	000 979 135	X	1,0
			000 979 133	X	1,0
			000 979 217	X	2,5
			000 979 227	X	2,5
8	1H0 973 103 A	round connector housing		X	
		for single wiring:	000 979 133	X	1,0
			000 979 133 A	X	1,0
			000 979 217	X	2,5
9	1H0 973 135	round connector housing		X	
		for single wiring:	000 979 129	X	1,0
			000 979 219	X	2,5
10	8D0 971 943	rd. connector sleeve housing	15 pin	1	
		for single wiring:	000 979 128	X	1,0
			000 979 221	X	2,5
11	4B0 972 575	flat connector housing	15 pin black	1	
		for single wiring:	000 979 012	X	0,5
12	4B0 972 585	flat contact housing	15 pin black	X	
		for single wiring:	000 979 009	X	0,5
13	1J0 962 615	flat contact housing with helper contact catch electronic control unit	15 pin	1	
		for single wiring:	000 979 131	X	1,0
			000 979 131 A	X	1,0
			000 979 225	X	2,5
			000 979 225 A	X	2,5
14	1J0 962 615 B	flat contact housing with helper contact catch electronic control unit	15 pin	1	
		for single wiring:	000 979 131	X	1,0
			000 979 131 A	X	1,0
			000 979 225	X	2,5
			000 979 225 A	X	2,5

Pos	Part Number	Name	Remarks	Qty	Model

Model	Year	MG	SG	Illustration	VIN No.	Update	14:49	18.02.20100	ETKA
EL	90	9	71	971-85		336			

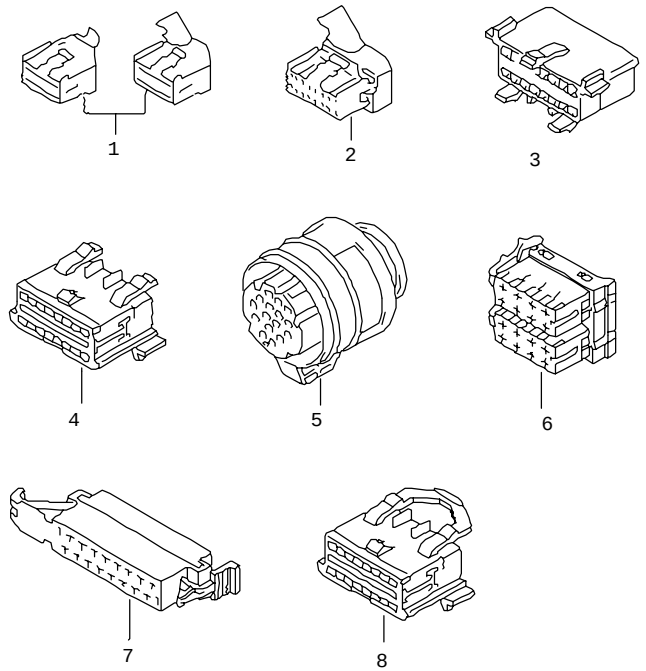

Pos	Part Number	Name	Remarks	Qty	Model
		connector housing	16 pin		
1	4A0 972 883 A	flat contact housing		X	
		for single wiring:	000 979 003 A	X	0,5
2	4A0 972 883 C	flat contact housing		X	
		for single wiring:	000 979 006	X	0,5
			000 979 121	X	1.0
			000 979 223	X	1,5
3	1H0 972 695	flat contact housing	16 pin	X	
		for single wiring:	000 979 131	X	1,0
			000 979 131 A	X	1,0
4	3A0 972 695	flat contact housing	16 pin	1	
		for single wiring:	000 979 011	X	0,5
		connecting piece for diagnosis plug			
5	8D0 972 984	round connector housing connecting piece 5 speed automatic gearbox	16 pin	1	
6	2D0 971 989 AG	flat contact housing	16 pin	1	
		for single wiring:	000 979 217	X	2,5
7	2D0 971 989 DA	flat contact housing connecting piece electronic control unit for central locking system	16 pin	1	
		for single wiring:	000 979 133	X	1,0
			000 979 225	X	2,5

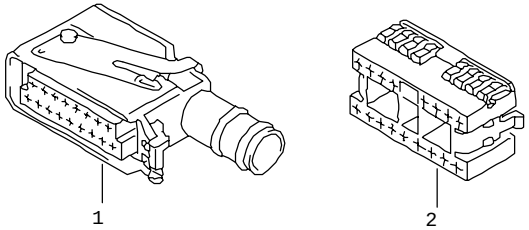

Pos	Part Number	Name	Remarks	Qty	Model
		connector housing	17-pin		
1	2D0 998 989	parts kit		1	
		flat contact housing	17-pin		
		connecting piece			
		electronic control unit			
2	1J0 972 999	flat contact housing	17-pin	1	
		connecting piece			
		switch for driving headlights			
		for single wiring:	000 979 126	X	1,0
			000 979 227	X	2,5

Model	Year	MG	SG	Illustration	VIN No.	Update	14:50	18.02.20100	ETKA
EL	90	9	71	971-95		336			

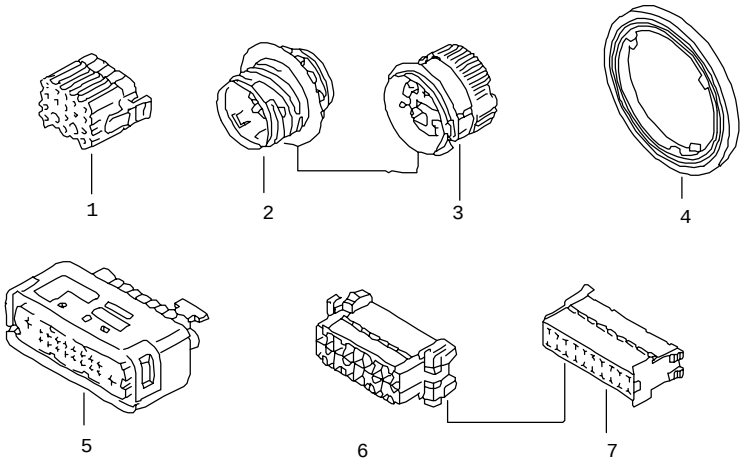

Pos	Part Number	Name	Remarks	Qty	Model
		connector housing	18 pin		
1	171 971 971 N	rd. connector sleeve housing		X	
		for single wiring:	000 979 108	X	1,0
			000 979 110	X	1,0
			000 979 208	X	2,5
			000 979 211	X	2,5
			000 979 305	X	4,0
2	6N0 959 735 A	flat contact housing	18 pin	X	
		connecting piece			
		flat contact housing mounting			
		for single wiring:	000 979 132	X	1,0
			000 979 132 A	X	1,0
			000 979 129	X	1,0
			000 979 129 A	X	1,0
			000 979 220	X	2,5
3	6N0 959 740	flat contact housing mounting	18 pin	2	
		for single wiring:	000 979 126	X	1,0
		a pillar	000 979 217	X	2,5
		for contact housing:	3A0 972 701 H	1	
			3A0 972 703 H	1	
			3A0 972 706 H	1	
			3A0 972 706 J	1	
4	3A0 959 750	sealing washer		1	
		for:			
		flat contact housing mounting	3A0 959 740		
			6N0 959 740		
5	1J0 959 383 B	flat contact housing with gasket	18 pin	1	
		electronic control unit	rear door		
		for single wiring:	000 979 131	X	1,0
			000 979 133	X	1,0
			000 979 225	X	2,5
6	2D0 971 989 BE	flat connector housing	18 pin	1	
7	2D0 971 989 DB	flat contact housing	18 pin	1	
		connecting piece			
		fuse box/relay plate			
		for single wiring:	000 979 133	X	1,0
			000 979 225	X	2,5
7	2D0 971 989 DB	flat contact housing	18 pin	1	
		connecting piece			
		fuse box/relay plate			
		for single wiring:	000 979 133	X	1,0
			000 979 225	X	2,5

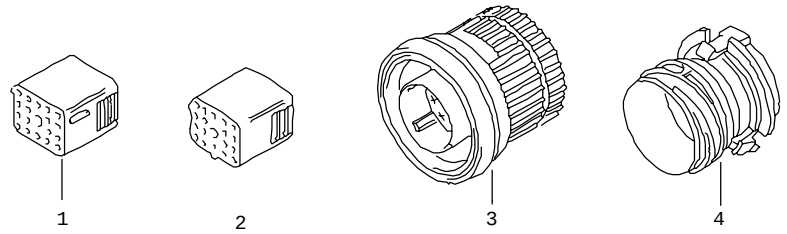

Pos	Part Number	Name	Remarks	Qty	Model
		connector housing	19 pin		
1	171 971 971 C	rd. connector sleeve housing	plain	X	
		for single wiring:	000 979 108	X	1,0
			000 979 110	X	1,0
			000 979 208	X	2,5
			000 979 211	X	2,5
			000 979 305	X	4,0
2	171 971 971 E	rd. connector sleeve housing	white	X	
		for single wiring:	000 979 108	X	1,0
			000 979 110	X	1,0
			000 979 208	X	2,5
			000 979 211	X	2,5
			000 979 305	X	4,0
3	6N0 973 103	flat contact housing	19 pin	1	
		as required use:	357 972 840	X	
		for single wiring:	000 979 131	X	1,0
			000 979 131 A	X	1,0
			000 979 126	X	1,0
			000 979 217	X	2,5
			000 979 227	X	2,5
4	6N0 973 131	flat connector housing	19 pin	1	
		as required use:	357 972 840	X	
		for single wiring:	000 979 132	X	1,0
			000 979 132 A	X	1,0
			000 979 126	X	1,0
			000 979 129	X	1,0
			000 979 219	X	2,5
			000 979 220	X	2,5

Model	Year	MG	SG	Illustration	VIN No.	Update	14:50	18.02.20100	ETKA
EL	90	9	71	972-05		336			

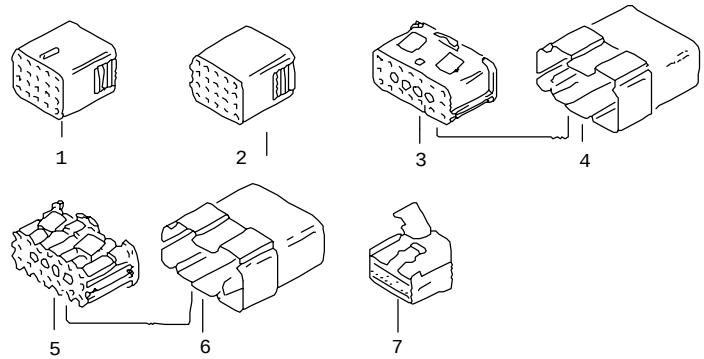

Pos	Part Number	Name	Remarks	Qty	Model
		connector housing	20 pin		
1	171 971 971	rd. connector sleeve housing	yellow	X	
		for single wiring:	000 979 108	X	1,0
			000 979 208	X	2,5
2	--- --- ---	no longer available			
3	867 972 501	rd. connector sleeve housing		X	
		for single wiring:	000 979 108	X	1,0
			000 979 110	X	1,0
			000 979 208	X	2,5
			000 979 211	X	2,5
			000 979 305	X	4,0
4	867 972 501 B	round connector housing		X	
		for single wiring:	000 979 109	X	1,0
			000 979 111	X	1,0
			000 979 209	X	2,5
			000 979 210	X	2,5
			000 979 304	X	4,0
5	867 972 501 A	rd. connector sleeve housing		X	
		for single wiring:	000 979 108	X	1,0
			000 979 110	X	1,0
			000 979 208	X	2,5
			000 979 211	X	2,5
			000 979 305	X	4,0
6	867 972 501 C	round connector housing		X	
		for single wiring:	000 979 109	X	1,0
			000 979 111	X	1,0
			000 979 209	X	2,5
			000 979 210	X	2,5
			000 979 304	X	4,0
7	4A0 972 883 B	flat contact housing		X	
		for single wiring:	000 979 003 A	X	0,5

Model	Year	MG	SG	Illustration	VIN No.	Update	14:51	18.02.20100	ETKA
EL	90	9	71	972-10		336			

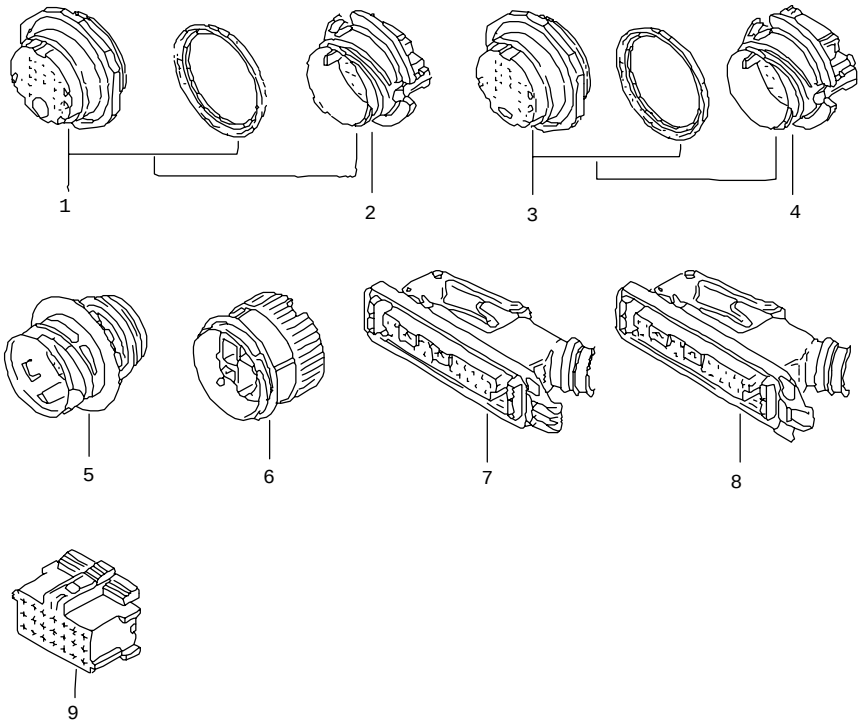

Pos	Part Number	Name	Remarks	Qty	Model
		connector housing	21 pin		
1	1H4 959 735 D	flat contact housing	21 pin	X	
		for single wiring:	000 979 132	X	1,0
			000 979 129	X	1,0
			000 979 130	X	1,0
			000 979 219	X	2,5
			000 979 220	X	2,5
			000 979 302	X	4,0
2	1H4 959 741 B	flat contact housing mounting pillar b		X	
		for contact housing:	1H4 972 705		
			1H4 972 709		
			191 972 751		
3	1H4 959 735 E	flat contact housing	21 pin	1	
		for single wiring:	000 979 132	X	1,0
			000 979 129	X	1,0
			000 979 130	X	1,0
			000 979 219	X	2,5
			000 979 220	X	2,5
			000 979 302	X	4,0
4	1H4 959 741 C	flat contact housing mounting pillar b		1	
		for contact housing:	1H4 972 705		
			1H4 972 709		
			191 972 751		
5	3A0 959 735	flat contact housing	21 pin	1	
		without:	DICHTUNG		
		for single wiring:	000 979 132	X	1,0
			000 979 129	X	1,0
			000 979 130	X	1,0
			000 979 219	X	2,5
			000 979 220	X	2,5
			000 979 302	X	4,0
6	3A0 959 740	flat contact housing mounting pillar b	21 pin	1	
		for contact housing:	3A0 972 701 H	1	
			3A0 972 702 H	1	
			3A0 972 706 J	1	
			3A0 972 709	1	
6	3A0 959 740	flat contact housing mounting pillar b	21 pin	1	
		for contact housing:	3A0 972 701 H	1	
			3A0 972 702 H	1	
			3A0 972 706 J	1	
			3A0 972 709	1	

Pos	Part Number	Name	Remarks	Qty	Model
7	4A0 971 985 A	flat contact housing with gasket	21 pin	1	QUATTRO
		for single wiring:	000 979 133	X	1,0
			000 979 133 A	X	1,0
			000 979 135	X	1,0
			000 979 217	X	2,5
			000 979 227	X	2,5
			000 979 407	X	6,0
8	4A0 971 985 B	flat contact housing with gasket	21 pin	1	
		for single wiring:	000 979 133	X	1,0
			000 979 133 A	X	1,0
			000 979 135	X	1,0
			000 979 217	X	2,5
			000 979 227	X	2,5
			000 979 407	X	6,0
(8)	4A0 971 985 C	flat contact housing with gasket	21 pin	1	
		for single wiring:	000 979 126	X	1,0
			000 979 135	X	1,0
			000 979 216	X	2,5
9	2D0 971 989 CH	flat contact housing connecting piece special relay turn signal	21 pin	1	
		for single wiring:	000 979 133	X	1,0
			000 979 225	X	2,5

Pos	Part Number	Name	Remarks	Qty	Model

Model	Year	MG	SG	Illustration	VIN No.	Update	14:51	18.02.20100	ETKA
EL	90	9	71	972-15		336			

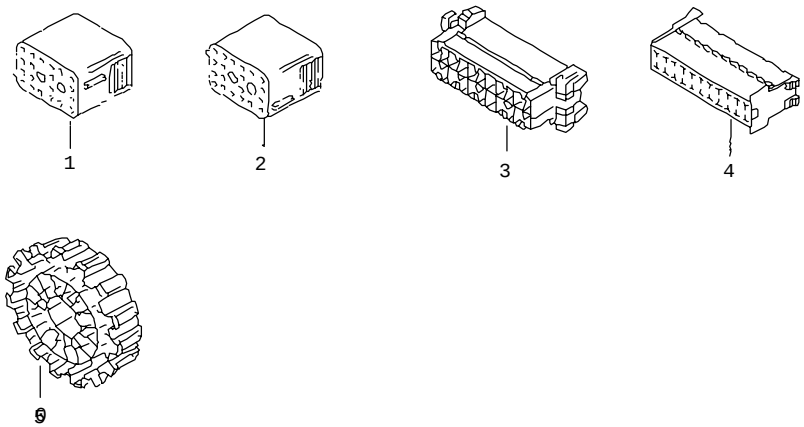

Pos	Part Number	Name	Remarks	Qty	Model
		connector housing	22 pin		
1	171 971 971 A	rd. connector sleeve housing	black	X	
		for single wiring:	000 979 108	X	1,0
			000 979 110	X	1,0
			000 979 208	X	2,5
			000 979 211	X	2,5
			000 979 305	X	4,0
2	171 971 971 B	rd. connector sleeve housing	blue	X	
		for single wiring:	000 979 108	X	1,0
			000 979 110	X	1,0
			000 979 208	X	2,5
			000 979 211	X	2,5
			000 979 305	X	4,0
3	2D0 971 989 BF	flat connector housing	22 pin	1	
4	2D0 971 989 AL	flat contact housing	22 pin	1	
5	3A0 971 519 A	ground connector	2,8/4.8 22 point	1	

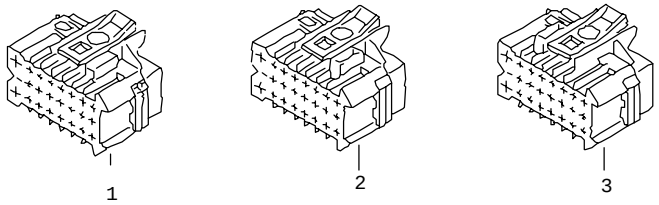

Pos	Part Number	Name	Remarks	Qty	Model
		connector housing	23 POLIG		
1	1J0 962 623	flat contact housing with helper contact catch electronic control unit	23 pin black	1	
		for single wiring:	000 979 131	X	1,0
			000 979 131 A	X	1,0
			000 979 225	X	2,5
			000 979 225 A	X	2,5
2	1J0 962 623 A	flat contact housing with helper contact catch electronic control unit	23 pin black	1	
		for single wiring:	000 979 131	X	1,0
			000 979 131 A	X	1,0
			000 979 225	X	2,5
			000 979 225 A	X	2,5
3	1J0 962 623 B	flat contact housing with helper contact catch electronic control unit	23 pin green	1	
		for single wiring:	000 979 131	X	1,0
			000 979 131 A	X	1,0
			000 979 225	X	2,5
			000 979 225 A	X	2,5

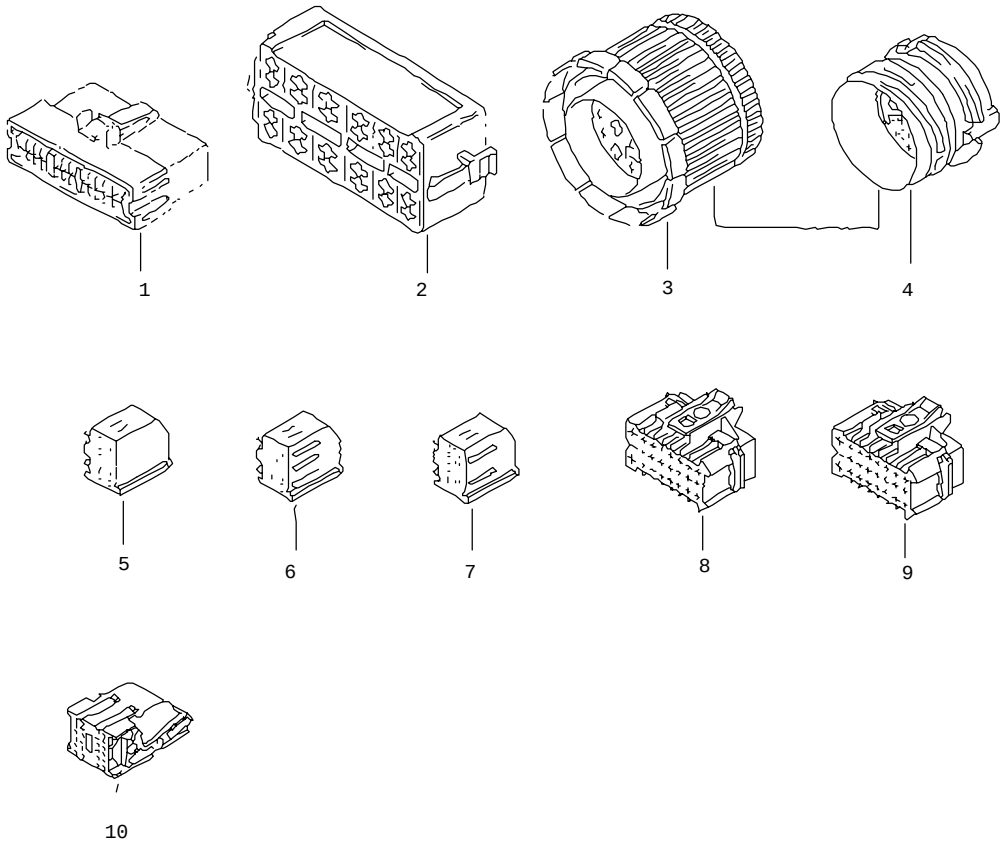

Pos	Part Number	Name	Remarks	Qty	Model
		connector housing	24 pin		
1	443 971 997	spring contact housing	6,3	X	
		for single wiring:	000 979 101	X	1,0
2	861 972 999	terminal pin housing			
		for single wiring:	000 979 135	X	1,0
			000 979 227	X	2,5
			000 979 407	X	6,0
3	3A0 973 103	flat connector housing		X	
		for single wiring:	000 979 131	X	1,0
			000 979 126	X	1,0
			000 979 217	X	2,5
			000 979 227	X	2,5
4	3A0 973 131	flat connector housing	24 pin	1	
		for single wiring:	000 979 132	X	1,0
			000 979 129	X	1,0
			000 979 219	X	2,5
			000 979 220	X	2,5
5	4A0 972 601 A	flat contact housing with	24 pin	1	
		helper contact catch	black		
		connecting piece			
		electronic control unit	A		
		for single wiring:	000 979 002	X	0,5
			000 979 003 A	X	0,5
6	4A0 972 602 A	flat contact housing with	24 pin	1	
		helper contact catch	red		
		connecting piece			
		electronic control unit	B		
		for single wiring:	000 979 002	X	0,5
			000 979 003 A	X	0,5
7	4A0 972 603 A	flat contact housing with	24 pin	1	
		helper contact catch	brown		
		connecting piece			
		electronic control unit	C		
		for single wiring:	000 979 002	X	0,5
			000 979 003 A	X	0,5
8	1J0 962 624	flat contact housing with	24 pin	1	
		helper contact catch			
		for single wiring:	000 979 131	X	1,0
			000 979 131 A	X	1,0
			000 979 132	X	1,0
			000 979 132 A	X	1,0
			000 979 134	X	1,0

Pos	Part Number	Name	Remarks	Qty	Model
9	1J0 962 624 A	flat contact housing with helper contact catch	24 pin grey	1	
		for single wiring:	000 979 131	X	1,0
			000 979 131 A	X	1,0
			000 979 132	X	1,0
			000 979 132 A	X	1,0
			000 979 134	X	1,0
10	4B0 906 230	flat contact housing with cap	24 pin	1	
		for single wiring:	000 979 003 A	X	0,5

Pos	Part Number	Name	Remarks	Qty	Model

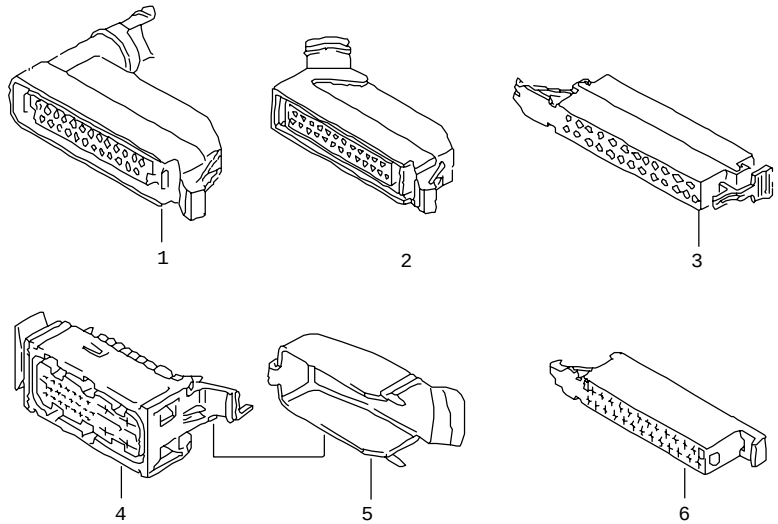

Pos	Part Number	Name	Remarks	Qty	Model
		connector housing	25 pin		
1	191 906 365	flat contact housing with gasket		X	
		for single wiring:	000 979 133	X	1,0
			000 979 133 A	X	1,0
			000 979 217	X	2,5
2	443 906 365	flat contact housing with gasket		X	
		for single wiring:	000 979 133	X	1,0
			000 979 133 A	X	1,0
			000 979 217	X	2,5
3	443 972 963 C	contact carrier		X	
		for single wiring:	000 979 133	X	1,0
			000 979 133 A	X	1,0
			000 979 217	X	2,5
4	6N0 973 213	flat contact housing with helper contact catch	25 pin	1	
		for single wiring:	000 979 131	X	1,0
			000 979 131 A	X	1,0
			000 979 407	X	6,0
5	1H0 973 213 A	flat contact housing with helper contact catch electronic control unit for anti-locking brake system-abs-	25 pin	1	
		for single wiring:	000 979 131	X	1,0
			000 979 131 A	X	1,0
			000 979 407	X	6,0
6	2D0 971 989 CQ	flat contact housing connecting piece control unit for idling stabilization	25 pin	1	
		for single wiring:	000 979 133	X	1,0
			000 979 225	X	2,5

Model	Year	MG	SG	Illustration	VIN No.	Update	14:52	18.02.20100	ETKA
EL	90	9	71	972-35		336			

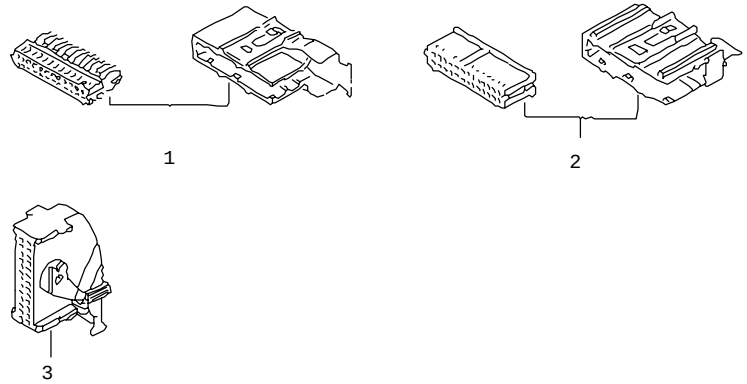

Pos	Part Number	Name	Remarks	Qty	Model
		connector housing	26 pin		
1	4A1 972 977	flat contact housing	violet	X	
		for single wiring:	000 979 003 A	X	0,5
2	443 972 977 C	flat contact housing	yellow	X	
		for single wiring:	000 979 003 A	X	0,5
3	3B0 919 754	flat contact housing with cap	26 pin green/black	1	
		for single wiring:	000 979 010	X	0,5
(3)	7M0 937 711	flat contact housing with cap	26 pin green	1	
		for single wiring:	000 979 010	X	0,5
-	8L0 971 966	flat contact housing booster	26 pin	1	
		for single wiring:	000 979 013	X	0,5
			000 979 142	X	1,0

Model	Year	MG	SG	Illustration	VIN No.	Update	14:52	18.02.20100	ETKA
EL	90	9	71	972-40		336			

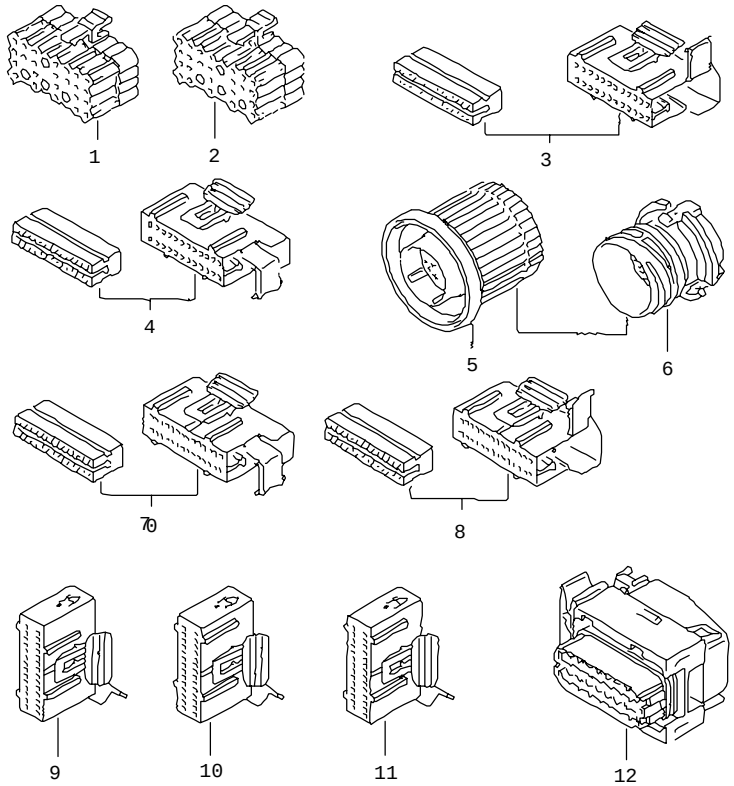

Pos	Part Number	Name	Remarks	Qty	Model
		connector housing	28 pin		
1	171 971 971 L	rd. connector sleeve housing		X	
		for single wiring:	000 979 108	X	1,0
			000 979 110	X	1,0
			000 979 208	X	2,5
			000 979 211	X	2,5
			000 979 305	X	4,0
2	171 971 971 M	rd. connector sleeve housing		X	
		for single wiring:	000 979 108	X	1,0
			000 979 110	X	1,0
			000 979 208	X	2,5
			000 979 211	X	2,5
			000 979 305	X	4,0
3	--- --- --- .	discontinued / replacement:	191 972 530 B	1	
			357 972 531 black	1	
		for single wiring:	000 979 002	X	0,5
(3)	191 972 530 B	finger plate	black	1	
(3)	357 972 531	contact carrier	28 pin	1	
4	--- --- --- .	discontinued / replacement:	357 972 530 A	1	
			357 972 531 white	1	
		for single wiring:	000 979 002	X	0,5
(4)	357 972 530 A	finger plate	white	1	
(4)	357 972 531	contact carrier	28 pin	1	
5	1H0 973 103	flat contact housing with gasket		X	
		for single wiring:	000 979 131	X	1,0
			000 979 131 A	X	1,0
			000 979 133	X	1,0
			000 979 133 A	X	1,0
			000 979 217	X	2,5
6	1H0 973 131	flat connector housing		X	
		for single wiring:	000 979 132	X	1,0
			000 979 132 A	X	1,0
			000 979 129	X	1,0
			000 979 219	X	2,5
7	1H0 972 529	terminal pin housing	28 pin red	1	
		for single wiring:	000 979 002	X	0,5

Pos	Part Number	Name	Remarks	Qty	Model
8	535 972 529	terminal pin housing	28 pin blue	1	
		for single wiring:	000 979 002	X	0,5
9	7M0 972 529	terminal pin housing	28 pin white	1	
		for single wiring:	000 979 002	X	0,5
10	--- --- --- .	discontinued / replacement:	7M0 972 530 A	1	
			357 972 531	1	
			28 pin red		
		for single wiring:	000 979 002	X	0,5
(10)	7M0 972 530 A	finger plate	red	1	
(10)	357 972 531	contact carrier	28 pin	1	
		for single wiring:	000 979 002	X	
11	7M0 972 529 B	terminal pin housing	28 pin blue	1	
		for single wiring:	000 979 002	X	0,5
12	1J0 906 379 B	flat contact housing connecting piece electronic control unit	28 pin	1	
		for single wiring:	000 979 131	X	1,0
			000 979 131 A	X	1,0

Pos	Part Number	Name	Remarks	Qty	Model

Model	Year	MG	SG	Illustration	VIN No.	Update	14:52	18.02.20100	ETKA
EL	90	9	71	972-45		336			

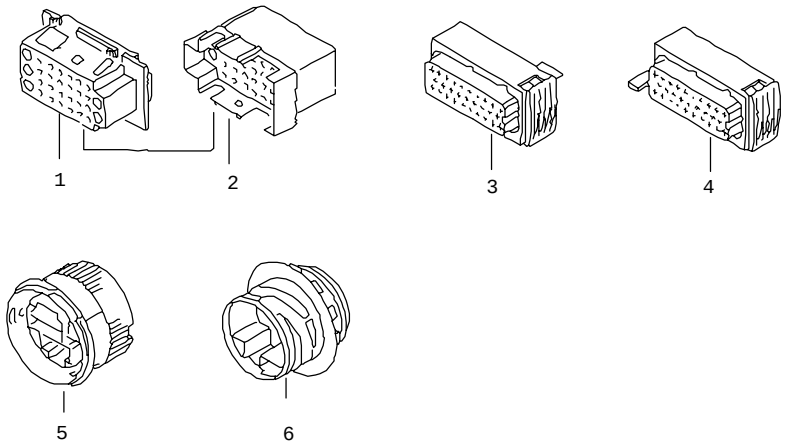

Pos	Part Number	Name	Remarks	Qty	Model
		connector housing	29 pin		
1	861 972 501 A	rd. connector sleeve housing		X	
		for single wiring:	000 979 108	X	1,0
			000 979 110	X	1,0
			000 979 208	X	2,5
			000 979 211	X	2,5
			000 979 305	X	4,0
2	861 972 998 A	round connector housing		X	
		for single wiring:	000 979 109	X	1,0
			000 979 111	X	1,0
			000 979 209	X	2,5
			000 979 210	X	2,5
			000 979 304	X	4,0
3	1J0 959 382	flat contact housing with helper contact catch electronic control unit	29 pin passenger door	1	
		for single wiring:	000 979 131	X	1,0
			000 979 133	X	1,0
			000 979 225	X	2,5
4	1J0 959 382 B	flat contact housing with helper contact catch electronic control unit	29 pin passenger door	1	
		for single wiring:	000 979 131	X	1,0
			000 979 133	X	1,0
			000 979 225	X	2,5
5	7M0 959 740	flat contact housing mounting a pillar	29 pin	1	
		for contact housing:	3A0 972 701 H		
			3A0 972 703 H		
			3A0 972 706 H		
			3A0 972 709		
			7M0 972 710		
6	7M0 959 735	flat contact housing	29 pin	1	
		for single wiring:	000 979 132	X	1,0
			000 979 129	X	1,0
			000 979 219	X	2,5

Model	Year	MG	SG	Illustration	VIN No.	Update	14:52	18.02.20100	ETKA
EL	90	9	71	972-50		336			

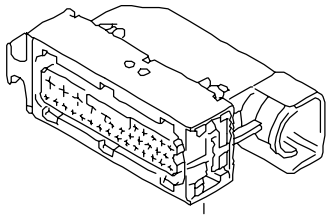

Pos	Part Number	Name	Remarks	Qty	Model
		connector housing	31 pin		
1	8D0 971 977	flat contact housing with helper contact catch	31 pin	1	
		for single wiring:	000 979 131	X	1,0
			000 979 131 A	X	1,0
			000 979 227	X	2,5
			000 979 306	X	4,0

Model	Year	MG	SG	Illustration	VIN No.	Update	14:53	18.02.20100	ETKA
EL	90	9	71	972-55		336			

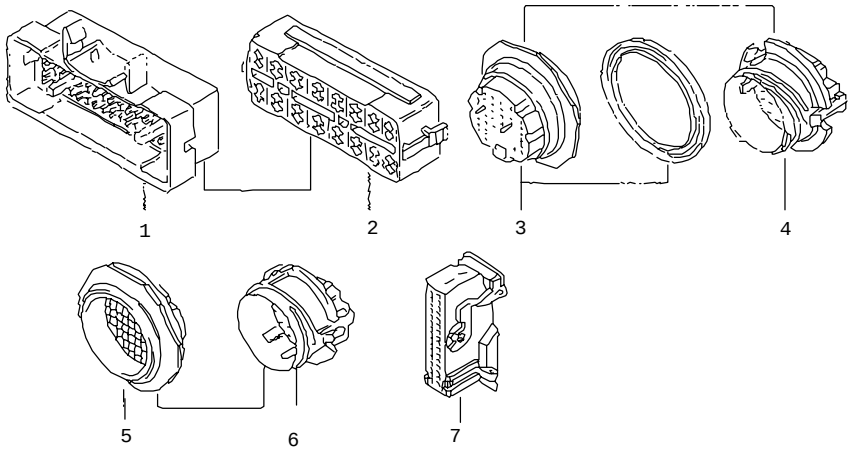

Pos	Part Number	Name	Remarks	Qty	Model
		connector housing	32 pin		
1	191 972 998	flat connector housing		X	
		for single wiring:	000 979 104	X	1,0
			000 979 203	X	2,5
			000 979 409	X	6,0
2	867 972 999 E	flat contact housing		X	
		for single wiring:	000 979 107	X	1,0
			000 979 204	X	2,5
			000 979 402	X	6,0
3	--- --- --- .	discontinued / replacement:	3A0 959 735 C		
4	--- --- --- .	discontinued / replacement:	3A0 959 741 A		
		a pillar			
5	3A0 959 735 C	flat contact housing	32 pin	1	
		for single wiring:	000 979 129	X	1,0
			000 979 130	X	1,0
			000 979 219	X	2,5
			000 979 220	X	2,5
			000 979 302	X	4,0
6	3A0 959 741 A	flat contact housing mounting	32 pin	1	
		a pillar			
7	8L0 972 977 C	flat contact housing with	32 pin	1	
		cap	green		
		connecting piece			
		combi instrument			
		for single wiring:	000 979 003 A	X	0,5
(7)	8L0 972 977 D	flat contact housing with	32 pin	1	
		cap	blue		
		connecting piece			
		combi instrument			
		for single wiring:	000 979 003 A	X	0,5

Model	Year	MG	SG	Illustration	VIN No.	Update	14:53	18.02.20100	ETKA
EL	90	9	71	972-60		336			

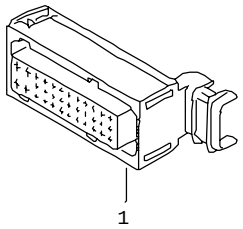

Pos	Part Number	Name	Remarks	Qty	Model
		connector housing	34 POLIG		
1	1J0 959 381	flat contact housing with helper contact catch	34 POLIG	1	
		electronic control unit for single wiring:	driver's door		
			000 979 131	X	1,0
			000 979 133	X	1,0
			000 979 225	X	2,5

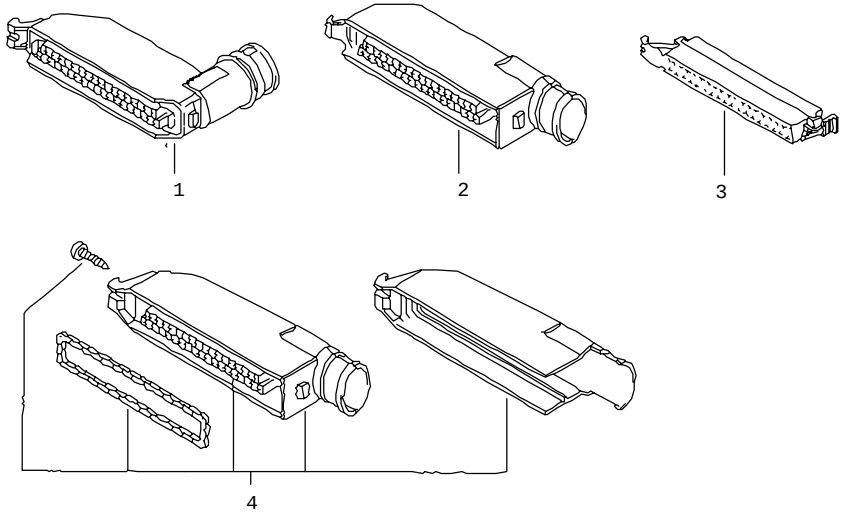

Pos	Part Number	Name	Remarks	Qty	Model
		connector housing	35 pin		
1	3A0 906 370	flat contact housing with gasket		X	
		for single wiring:	000 979 133	X	1,0
			000 979 133 A	X	1,0
			000 979 217	X	2,5
2	191 906 370 A	flat contact housing with gasket		X	
		for single wiring:	000 979 133	X	1,0
			000 979 133 A	X	1,0
			000 979 217	X	2,5
3	443 972 963	flat contact housing		X	
		for single wiring:	000 979 133	X	1,0
			000 979 133 A	X	1,0
			000 979 217	X	2,5
4	251 906 370 A	flat contact housing	35 pin	1	
		for single wiring:	000 979 133	X	1,0
			000 979 133 A	X	1,0
			000 979 217	X	2,5
		rework if necessary adapt with workshop equipment			
(4)	357 906 370 C	flat contact housing with gasket	35 pin	1	
		for single wiring:	000 979 133	X	1,0
			000 979 133 A	X	1,0
			000 979 217	X	2,5

Model	Year	MG	SG	Illustration	VIN No.	Update	14:53	18.02.20100	ETKA
EL	90	9	71	972-70		336			

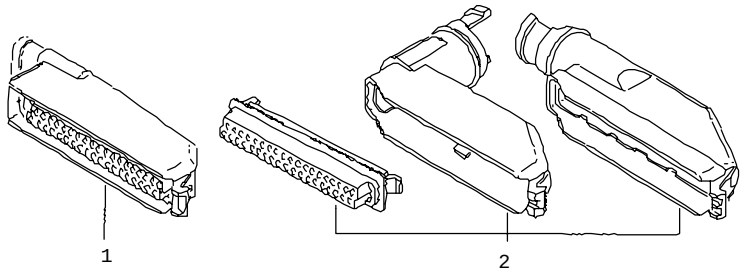

Pos	Part Number	Name	Remarks	Qty	Model
		connector housing	38 pin		
1	191 906 370	flat contact housing with gasket		X	
		for single wiring:	000 979 133	X	1,0
			000 979 133 A	X	1,0
			000 979 217	X	2,5
2	701 906 365	flat contact housing with gasket		X	
		for single wiring:	000 979 133	X	1,0
			000 979 133 A	X	1,0
			000 979 217	X	2,5

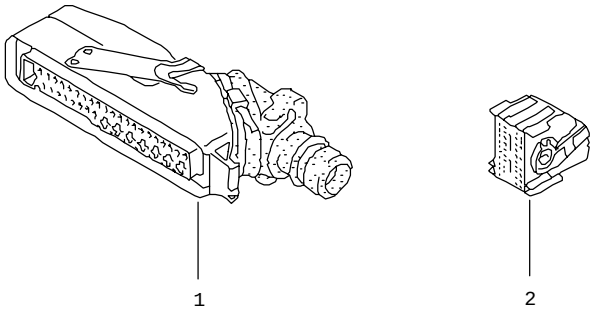

Pos	Part Number	Name	Remarks	Qty	Model
		connector housing	40 pin		
1	7D0 907 495	flat contact housing	40 pin	1	
		for single wiring:	000 979 131	X	1,0
			000 979 227	X	2,5
			000 979 407	X	4,0
(1)	2D0 971 989 DD	flat contact housing connecting piece abs unit	40 pin	1	
		for single wiring:	000 979 131	X	1,0
			000 979 227	X	2,5
			000 979 407	X	4,0
2	4B0 906 231	flat contact housing with cap	40 pin	1	
		for single wiring:	000 979 003 A	X	0,5
-	038 906 379 A	flat contact housing electronic control unit	40 pin	1	
		for single wiring:	000 979 003	X	0,5
			000 979 133	X	1,0
			000 979 133 A	X	1,0
			000 979 225	X	2,5
			000 979 225 A	X	2,5

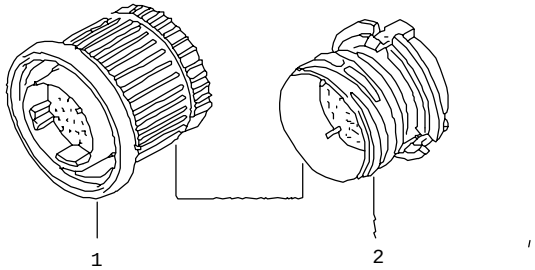

Pos	Part Number	Name	Remarks	Qty	Model
		connector housing	42 pin		
1	1H0 973 103 B	flat contact housing with gasket		X	
		for single wiring:	000 979 131	X	1,0
			000 979 131 A	X	1,0
			000 979 133	X	1,0
			000 979 133 A	X	1,0
			000 979 217	X	2,5
2	1H0 973 131 B	flat connector housing		X	
		for single wiring:	000 979 132	X	1,0
			000 979 132 A	X	1,0
			000 979 129	X	1,0
			000 979 219	X	2,5

Model	Year	MG	SG	Illustration	VIN No.	Update	14:54	18.02.20100	ETKA
EL	90	9	71	972-85		336			

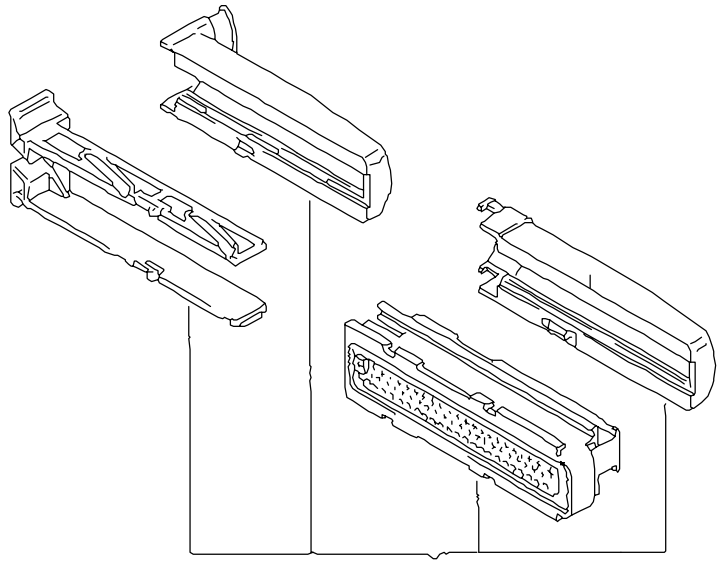

Pos	Part Number	Name	Remarks	Qty	Model
		connector housing	45 pin 47 POLIG		
		connector housing	45 pin		
1	1H0 906 370 H	flat contact housing with gasket		X	
		for single wiring:	000 979 131	X	1,0
			000 979 131 A	X	1,0
			000 979 133	X	1,0
			000 979 133 A	X	1,0
			000 979 217	X	2,5
(1)	1H0 906 370 M	flat contact housing with gasket	45 pin	X	
		for single wiring:	000 979 131	X	1,0
			000 979 131 A	X	1,0
			000 979 133	X	1,0
			000 979 133 A	X	1,0
			000 979 217	X	2,5
(1)	--- --- --- .	discontinued / replacement:	1H0 906 370 K		
		connector housing	47 POLIG		
-	1J0 973 047	flat contact housing with	47 pin	1	
		helper contact catch			
		electronic control unit for			
		anti-locking brake system-abs-			
		for single wiring:	000 979 131	X	1,0
			000 979 131 A	X	1,0
			000 979 135	X	1,0
			000 979 227	X	2,5
			000 979 306	X	4,0
			000 979 407	X	6,0

Model	Year	MG	SG	Illustration	VIN No.	Update	14:54	18.02.20100	ETKA
EL	90	9	71	972-90		336			

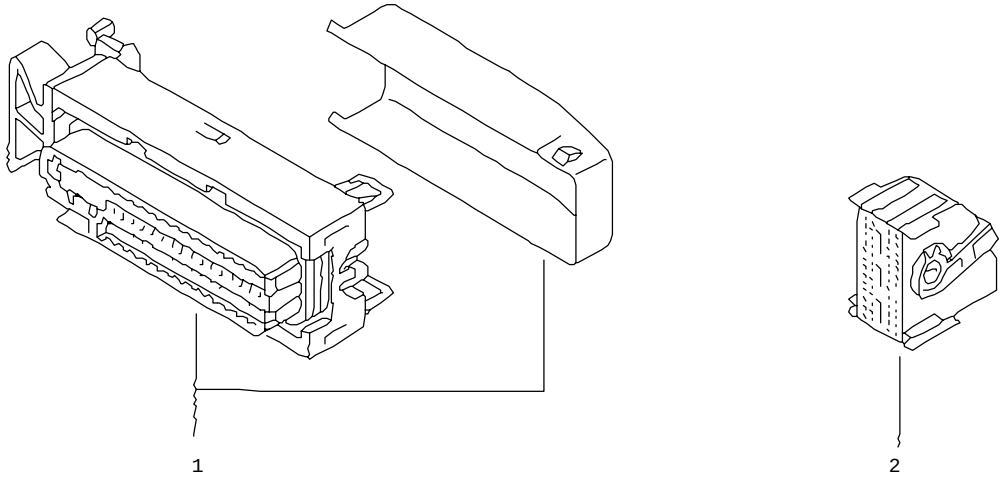

Pos	Part Number	Name	Remarks	Qty	Model
		connector housing	52 pin		
1	1J0 906 380 B	flat contact housing	52 pin	1	
		connecting piece			
		electronic control unit			
		for single wiring:	000 979 131	X	1,0
			000 979 131 A	X	1,0
2	4B0 906 232	flat contact housing with cap	52 pin	1	
		for single wiring:	000 979 003 A	X	0,5

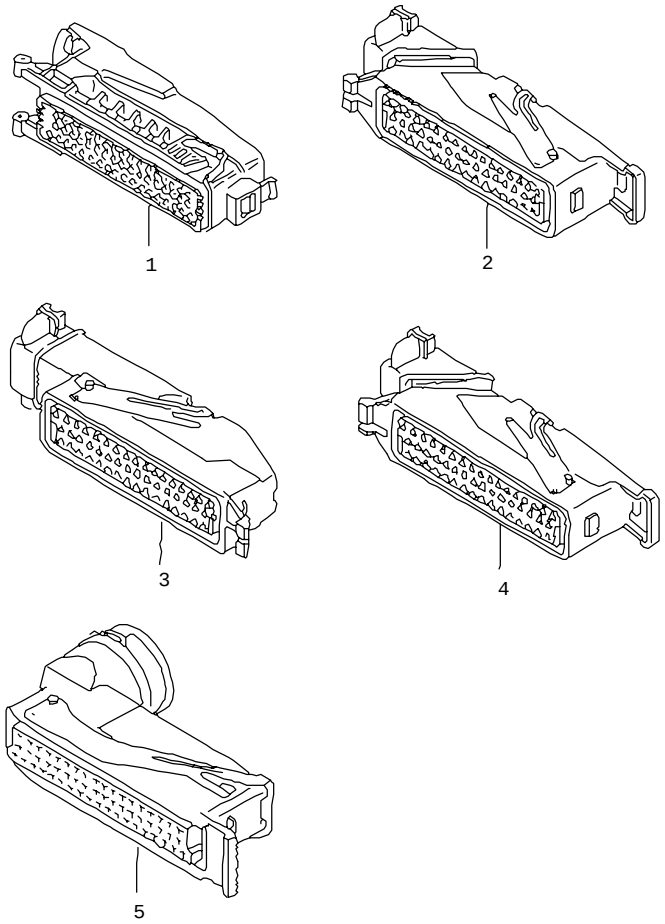

Pos	Part Number	Name	Remarks	Qty	Model
		connector housing	55 pin		
1	357 907 495	flat contact housing		X	
		for single wiring:	000 979 133	X	1,0
			000 979 133 A	X	1,0
			000 979 217	X	2,5
2	441 972 963 B	flat contact housing with gasket		X	
		for single wiring:	000 979 133	X	1,0
			000 979 133 A	X	1,0
			000 979 217	X	2,5
3	442 972 963	flat contact housing with gasket		X	
		for single wiring:	000 979 133	X	1,0
			000 979 133 A	X	1,0
			000 979 217	X	2,5
4	442 972 963 A	connecting strip		X	
		for single wiring:	000 979 133	X	1,0
			000 979 133 A	X	1,0
			000 979 217	X	2,5
5	357 907 495 A	flat contact housing with gasket		X	
		for single wiring:	000 979 133	X	1,0
			000 979 133 A	X	1,0
			000 979 217	X	2,5

Model	Year	MG	SG	Illustration	VIN No.	Update	14:55	18.02.20100	ETKA
EL	90	9	71	973-00		336			

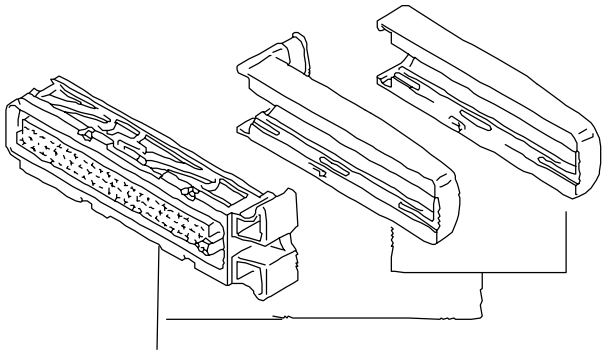

Pos	Part Number	Name	Remarks	Qty	Model
		connector housing	68 pin		
1	1H0 906 365	flat contact housing with gasket	68 pin	1	
		for single wiring:	000 979 131	X	1,0
			000 979 131 A	X	1,0
			000 979 133	X	1,0
			000 979 133 A	X	1,0
			000 979 217	X	2,5
(1)	1H0 906 370 J	flat contact housing with gasket	68 pin	1	
		for single wiring:	000 979 131	X	1,0
			000 979 131 A	X	1,0
			000 979 133	X	1,0
			000 979 133 A	X	1,0
			000 979 217	X	2,5

Model	Year	MG	SG	Illustration	VIN No.	Update	14:55	18.02.20100	ETKA
EL	90	9	71	973-05		336			

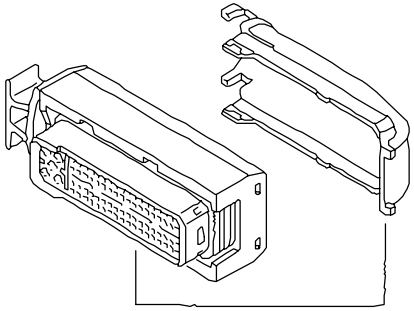

1

Pos	Part Number	Name	Remarks	Qty	Model
		connector housing	81 POLIG		
-	1J0 906 385 A	flat contact housing electronic control unit for single wiring:	81 POLIG 000 979 003 000 979 133 000 979 133 A 000 979 225 000 979 225 A	1 X X X X X	 0,5 1,0 1,0 2,5 2,5
-	3B0 906 385	flat contact housing electronic control unit	81 POLIG	1	

Model	Year	MG	SG	Illustration	VIN No.	Update	14:55	18.02.20100	ETKA
EL	90	9	71	973-10		336			

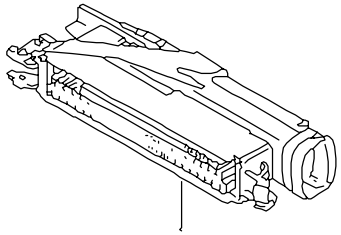

Pos	Part Number	Name	Remarks	Qty	Model
		connector housing	83 pin		
1	4A0 972 785	flat contact housing with gasket	83 pin	1	
		for single wiring:	000 979 121	X	1,0
			000 979 126	X	1,0
			000 979 217	X	2,5

Model	Year	MG	SG	Illustration	VIN No.	Update			
EL	90	9	71	973-15		336	14:55	18.02.20100	ETKA

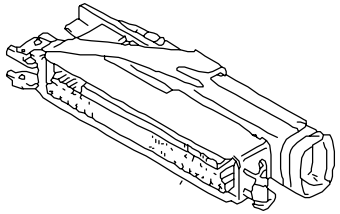

1

Pos	Part Number	Name	Remarks	Qty	Model
		connector housing	88 pin		
1	8D1 906 370	flat contact housing with gasket	88 pin	1	
		for single wiring:	000 979 121	X	1,0
			000 979 126	X	1,0
			000 979 217	X	2,5

Model	Year	MG	SG	Illustration	VIN No.	Update	16:30	18.02.20100	ETKA
EL	90	9	71	973-60		336			

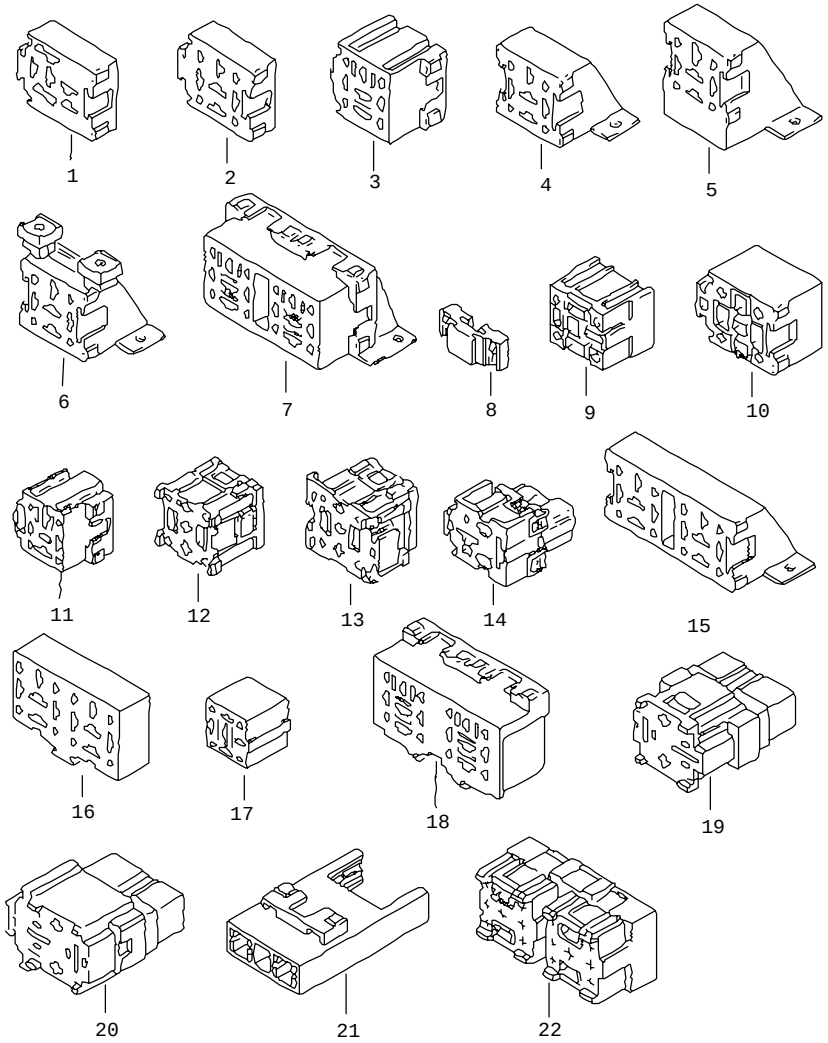

Pos	Part Number	Name	Remarks	Qty	Model
		relay plate			
1	135 937 501	relay plate	8 pin	X	
		for single wiring:	000 979 107	X	1,0
			000 979 204	X	2,5
			000 979 402	X	6,0
2	135 937 501 A	relay plate	9 pin	X	
		for single wiring:	000 979 105	X	1,0
			000 979 107	X	1,0
			000 979 204	X	2,5
			000 979 402	X	6,0
3	161 937 501 B	relay plate	9 pin	X	
		for single wiring:	000 979 105	X	1,0
			000 979 107	X	1,0
			000 979 204	X	2,5
			000 979 402	X	6,0
4	251 937 501	relay plate	9 pin	X	
		for single wiring:	000 979 105	X	1,0
			000 979 107	X	1,0
			000 979 204	X	2,5
			000 979 402	X	6,0
5	--- --- --- .	discontinued / replacement:	251 937 501 B	X	
6	251 937 501 B	relay plate	9 pin	X	
		for single wiring:	000 979 105	X	1,0
			000 979 107	X	1,0
			000 979 204	X	2,5
			000 979 402	X	6,0
			000 979 408	X	6,0
7	251 937 501 C	relay plate	18 pin	X	
		for single wiring:	000 979 105	X	1,0
			000 979 107	X	1,0
			000 979 204	X	2,5
			000 979 402	X	6,0
8	251 937 501 D	spacer		X	
9	443 937 501	relay plate	9 pin	X	
		for single wiring:	000 979 114	X	1,0
			000 979 133	X	1,0
			000 979 133 A	X	1,0
			000 979 212	X	2,5
			000 979 217	X	2,5
			000 979 405	X	6,0

Pos	Part Number	Name	Remarks	Qty	Model
10	443 937 501 B	relay plate	9 pin	X	
		for single wiring:	000 979 114	X	1,0
			000 979 133	X	1,0
			000 979 133 A	X	1,0
			000 979 212	X	2,5
			000 979 217	X	2,5
			000 979 405	X	6,0
11	867 937 501	relay plate	9 pin	X	
		for single wiring:	000 979 105	X	1,0
			000 979 107	X	1,0
			000 979 204	X	2,5
			000 979 402	X	6,0
			000 979 408	X	6,0
12	443 937 527	relay plate	9 pin	X	
		for single wiring:	000 979 114	X	1,0
			000 979 133	X	1,0
			000 979 133 A	X	1,0
			000 979 135	X	1,0
			000 979 212	X	2,5
			000 979 217	X	2,5
			000 979 227	X	2,5
			000 979 405	X	6,0
			000 979 407	X	6,0
(12)	3B0 937 527	relay plate	9 pin	X	
		for single wiring:	000 979 133	X	1,0
			000 979 133 A	X	1,0
			000 979 236	X	2,5
			000 979 411	X	6,0
(12)	4B0 937 527	relay plate	6 pin	X	
		for single wiring:	000 979 144	X	1,0
			000 979 236	X	2,5
			000 979 306	X	4,0
13	443 937 528	relay plate	9 pin	X	
		for single wiring:	000 979 114	X	1,0
			000 979 133	X	1,0
			000 979 133 A	X	1,0
			000 979 135	X	1,0
			000 979 212	X	2,5
			000 979 217	X	2,5
			000 979 227	X	2,5
			000 979 405	X	6,0
			000 979 407	X	6,0
14	447 937 528 A	relay plate	5 pin	X	
		for single wiring:	000 979 114	X	1,0
			000 979 133	X	1,0
			000 979 133 A	X	1,0
			000 979 212	X	2,5
			000 979 217	X	2,5
			000 979 405	X	6,0
(14)	2D0 937 501 A	relay plate	5 pin	1	
(14)	2D0 937 501 G	relay plate	4 pin	1	
15	321 941 845	relay plate	18 pin	X	
		for single wiring:	000 979 105	X	1,0
			000 979 107	X	1,0
			000 979 204	X	2,5
			000 979 402	X	6,0
16	531 941 845	relay plate	18 pin	X	
		for single wiring:	000 979 105	X	1,0
			000 979 107	X	1,0
			000 979 204	X	2,5
			000 979 402	X	6,0
17	849 941 593	relay plate	9 pin	X	
		for single wiring:	000 979 105	X	1,0
			000 979 107	X	1,0
			000 979 204	X	2,5
			000 979 402	X	6,0
18	357 937 501	relay plate	18 pin	X	
		for single wiring:	000 979 105	X	1,0
			000 979 107	X	1,0
			000 979 204	X	2,5
			000 979 402	X	6,0
19	>4A0 937 527	relay plate	4 pin	X	
		for single wiring:	000 979 107	X	1,0
			000 979 133	X	1,0
			000 979 133 A	X	1,0
			000 979 135	X	1,0
			000 979 217	X	2,5
			000 979 227	X	2,5
			000 979 407	X	6,0

Pos	Part Number	Name	Remarks	Qty	Model
(19)	7M0 937 527	relay plate	9 pin	1	
		for single wiring:	000 979 133	X	1,0
			000 979 133 A	X	1,0
			000 979 135	X	1,0
			000 979 225	X	2,5
			000 979 227	X	2,5
			000 979 236	X	2,5
			000 979 306	X	4,0
			000 979 407	X	6,0
20	441 937 528	relay plate	4 pin	X	
		for single wiring:	000 979 126	X	1,0
			000 979 217	X	2,5
			000 979 406	X	6,0
(20)	7M0 937 528	relay plate	9 pin	X	
22	4A0 937 529	dual relay plate		X	
		for single wiring:	000 979 114	X	1,0
			000 979 133	X	1,0
			000 979 133 A	X	1,0
			000 979 135	X	1,0
			000 979 212	X	2,5
			000 979 217	X	2,5
			000 979 227	X	2,5
(22)	2D0 937 501 J	relay plate	10 pin	1	

Pos	Part Number	Name	Remarks	Qty	Model

Pos	Part Number	Name	Remarks	Qty	Model
		flat contact housing airbag wiring harness			
-	4D0 972 571	flat contact housing airbag for single wiring:	2 pin yellow 000 979 010 A	X X	
-	4D0 972 575	flat connector housing airbag unit for single wiring:	2 pin yellow 000 979 015 A	X X	
-	8D0 971 969	round connector housing airbag for single wiring:	3 pin orange 000 979 015 A	X X	
-	8D0 971 974	round connector housing airbag for single wiring:	3 pin orange 000 979 010 A	1 X	
-	6X0 972 773	flat contact housing airbag for single wiring:	3 pin yellow 000 979 131 A	1 X	
-	6X0 972 783	flat contact housing airbag for single wiring:	3 pin yellow 000 979 132 A	1 X	
-	6N0 972 571	flat contact housing side airbag unit for single wiring:	4 pin yellow 000 979 010 A	X X	
(-)	8D0 972 586	flat contact housing side airbag unit for single wiring:	4 pin yellow 000 979 010 A	X X	
-	6N0 972 575	flat contact housing side airbag unit for single wiring:	4 pin yellow 000 979 015 A	X X	
(-)	8D0 972 576	flat contact housing side airbag unit for single wiring:	4 pin yellow 000 979 015 A	X X	
-	1H0 972 479	flat contact housing airbag for single wiring:	2 pin yellow 000 979 008 A	2	
-	1J0 973 605 B	flat contact housing cancelling ring with slip ring for single wiring:	5 pin yellow 000 979 008 A	1 X	

Pos	Part Number	Name	Remarks	Qty	Model
-	1J0 973 605 D	flat connector housing with additional contact catch cancelling ring with slip ring	5 pin yellow	1	
		for single wiring:	000 979 003 A	X	
		flat contact housing with cap control unit for driver/front passenger , side airbags and head airbag			
-	701 972 510	flat contact housing control unit for driver and passenger airbag	30 pin orange/black	1	
		for single wiring:	000 979 008 A	X	
-	2D0 973 374	flat connector housing electronic control unit airbag	30 pin orange orange	1	
		for single wiring:	000 979 010 A	X	
-	4A0 973 373	flat contact housing with cap	30 pin black/orange	1	
		for single wiring: control unit for driver and passenger airbag	000 979 010 A	X	
-	4D0 973 373	flat connector housing control unit for airbag for vehicles with side airbag	50 pin yellow/orange	1	
		for single wiring:	000 979 010 A	X	
-	4D0 973 373 A	flat connector housing control unit for driver and passenger airbag	50 pin yellow/white	1	
		for single wiring:	000 979 010 A	X	
-	4D0 973 373 B	flat connector housing control unit for driver/front passenger and side airbags	50 pin yellow/green	1	
		for single wiring:	000 979 010 A	X	
-	4D0 973 373 C	flat connector housing control unit for driver and passenger airbag	50 pin yellow/blue	1	
		for single wiring:	000 979 010 A	X	
-	4D1 973 373	cap with securing clip	white/yellow	1	

Pos	Part Number	Name	Remarks	Qty	Model
-	3B0 972 510	flat connector housing control unit for driver/front passenger and side airbags	50 POLIG GELB/GRAU	1	
		for single wiring:	000 979 010 A	X	
-	3B0 972 510 A	flat connector housing control unit for driver and passenger airbag	50 POLIG GELB/BRAUN	1	
		for single wiring:	000 979 010 A	X	
-	3B0 972 510 D	flat connector housing control unit for driver/front passenger , side airbags and head airbag	50 POLIG GELB/WEINROT	1	
		for single wiring:	000 979 010 A	X	
-	6Q0 972 509	flat connector housing control unit for driver and passenger airbag	75 POLIG GELB/BLAU	1	
		for single wiring:	000 979 010 A	X	
-	6Q0 972 509 A	flat connector housing control unit for driver/front passenger and side airbags	75 POLIG GELB/GRAU	1	
		for single wiring:	000 979 010 A	X	
-	6Q0 972 509 D	flat connector housing control unit for driver and passenger airbag	75 POLIG GELB/GELB	1	
		for single wiring:	000 979 010 A	X	
-	6Q0 972 509 E	flat connector housing control unit for driver/front passenger and side airbags	75 POLIG GELB/LEHMBRAUN	1	
		for single wiring:	000 979 010 A	X	
-	6Q0 972 509 F	flat connector housing control unit for driver/front passenger , side airbags and head airbag	75 POLIG GELB/TUERKIS	1	
		for single wiring:	000 979 010 A	X	
-	8D0 972 571 AA	flat connector housing control unit for driver/front passenger and side airbags	84 POLIG orange	1	
		for single wiring:	000 979 010 A	X	
-	8D0 972 571 AB	flat connector housing control unit for driver/front passenger and side airbags for vehicles with head airbag	84 POLIG white	1	
		for single wiring:	000 979 010 A	X	

Model	Year	MG	SG	Illustration	VIN No.	Update	16:31	18.02.20100	ETKA
EL	90	9	71	973-90		336			

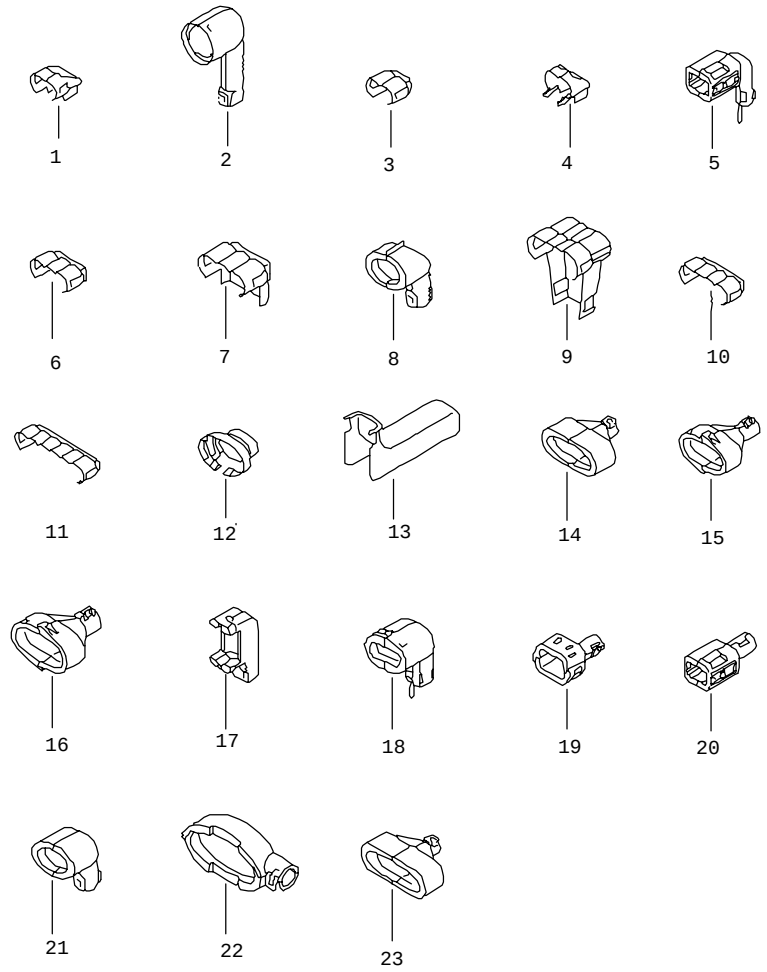

Pos	Part Number	Name	Remarks	Qty	Model
		protective cap			
1	357 906 732 A	angled protective cap	2 pin	X	
2	2D0 906 731	angled protective cap	2 pin	1	
3	357 906 732 B	angled protective cap	2 pin	X	
4	1H0 906 732	angled protective cap	2 pin	X	
5	1J0 971 921 D	angled protective cap connecting piece flat contact housing	2 pin 037 906 240	1	
6	357 906 733 B	angled protective cap	3 pin	X	
7	6N0 906 733	angled protective cap only for:	3 pin 1H0 906 233	X	
8	030 971 921	angled protective cap	3 pin	1	
(8)	7M0 906 970	angled protective cap	3 pin	1	
9	1H0 906 921	angled protective cap	4 pin	X	
10	357 906 734 B	angled protective cap	4 pin	1	
11	357 906 736 B	angled protective cap	6 pin	X	
12	6N0 906 738	angled protective cap	8 pin	1	
13	701 971 883	cap flat contact housing	for: 15 pin	1	
14	6X0 971 921	protective cap connecting piece flat contact housing	 4 pin	2	
15	6X0 971 921 A	protective cap connecting piece flat contact housing	 10 pin	2	
16	6X0 971 921 B	protective cap connecting piece flat contact housing	 14 pin	2	
16	6X0 971 921 B	protective cap connecting piece flat contact housing	 14 pin	2	
17	1J0 971 921	grommet		1	
18	1J0 971 921 A	protective cap		1	
19	1J0 971 921 B	protective cap		1	

Pos	Part Number	Name	Remarks	Qty	Model
20	1J0 971 921 C	protective cap		1	
21	1J0 971 921 E	protective cap		1	
22	1J0 971 921 F	grommet connecting piece flat contact housing	 1J0 973 726	2	
23	036 971 921 A	grommet		1	

Pos	Part Number	Name	Remarks	Qty	Model

Pos	Part Number	Name	Remarks	Qty	Model
		cap with securing clip flat contact housing with cap electronic control unit airbag			
-	701 972 515	cap with securing clip	orange/black	1	
-	4A0 973 373 A	cap with securing clip	black/orange	1	
-	2D0 973 373	cap with securing clip	orange orange	1	
		cap with securing clip			
-	4D0 973 374	cap with securing clip control unit for airbag for vehicles with side airbag	yellow/orange	1	
-	4D0 973 374 A	cap with securing clip control unit for airbag	yellow/white	1	
-	4D0 973 374 B	cap with securing clip control unit for airbag for vehicles with side airbag	yellow/green	1	
-	4D0 973 374 C	cap with securing clip control unit for airbag	yellow/blue	1	
-	3B0 973 510	cap with securing clip connecting piece control unit for airbag for vehicles with side airbag	GELB/GRAU	1	
-	3B0 973 510 A	cap with securing clip connecting piece control unit for airbag	GELB/BRAUN	1	

Model	Year	MG	SG	Illustration	VIN No.	Update	16:32	18.02.20100	ETKA
EL	90	9	71	976-00		336			

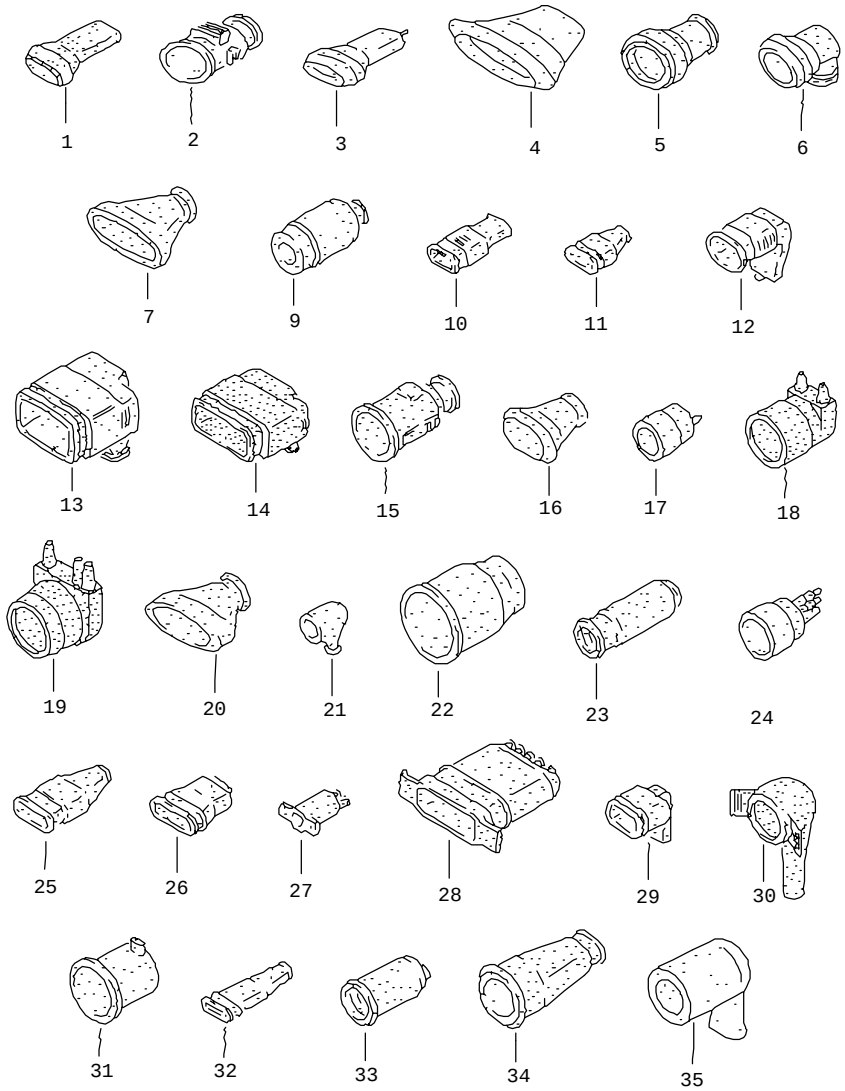

Pos	Part Number	Name	Remarks	Qty	Model
		grommet for connector housing	single wiring		
1	701 905 142	protective cap	16X6,5	X	
2	191 905 900 A	protective cap		X	
3	191 906 102	protective cap		X	
4	037 906 102 A	protective cap		X	
5	443 906 102 B	grommet	18X20,5	X	
6	443 906 102 C	grommet	18X20,5	X	
7	443 906 102 D	grommet		X	
8	--- --- --- .	discontinued / replacement:	357 906 732 B	X	
9	191 919 083	protective cap	32X10	X	
10	447 919 141	protective cap		X	
11	281 919 141 A	protective cap		X	
12	--- --- ---	no longer available		X	
13	191 919 141 B	protective cap		X	
14	191 919 141 C	protective cap		X	
15	191 919 459	protective cap		X	
16	191 927 907	protective cap	16X25	X	
17	111 945 521	boot		X	
18		discontinued / replacement:	111 945 521		
19	211 945 521 C	protective cap		X	
20	893 945 521	protective cap	28X10,7	X	
21	191 951 195	grommet	9,8X2	X	
22	431 953 331	grommet	39,5X1,5	X	
22	431 953 331	grommet	39,5X1,5	X	
23	447 953 331 A	grommet	15X48	X	
24	171 957 911	boot		X	
25	171 959 459	protective cap		X	
26	431 959 841	grommet		X	

Pos	Part Number	Name	Remarks	Qty	Model
27	211 963 035 A	protective cap		X	
28	251 963 211 B	protective cap		X	
29	443 971 239	grommet		X	
30	--- --- ---	no longer available			
31	433 971 867	grommet		X	
32	443 971 867	grommet	8,5	X	
33	--- --- ---	no longer available			
35	861 971 868	grommet		X	

Pos	Part Number	Name	Remarks	Qty	Model

Model	Year	MG	SG	Illustration	VIN No.	Update	16:32	18.02.20100	ETKA
EL	90	9	71	976-01		336			

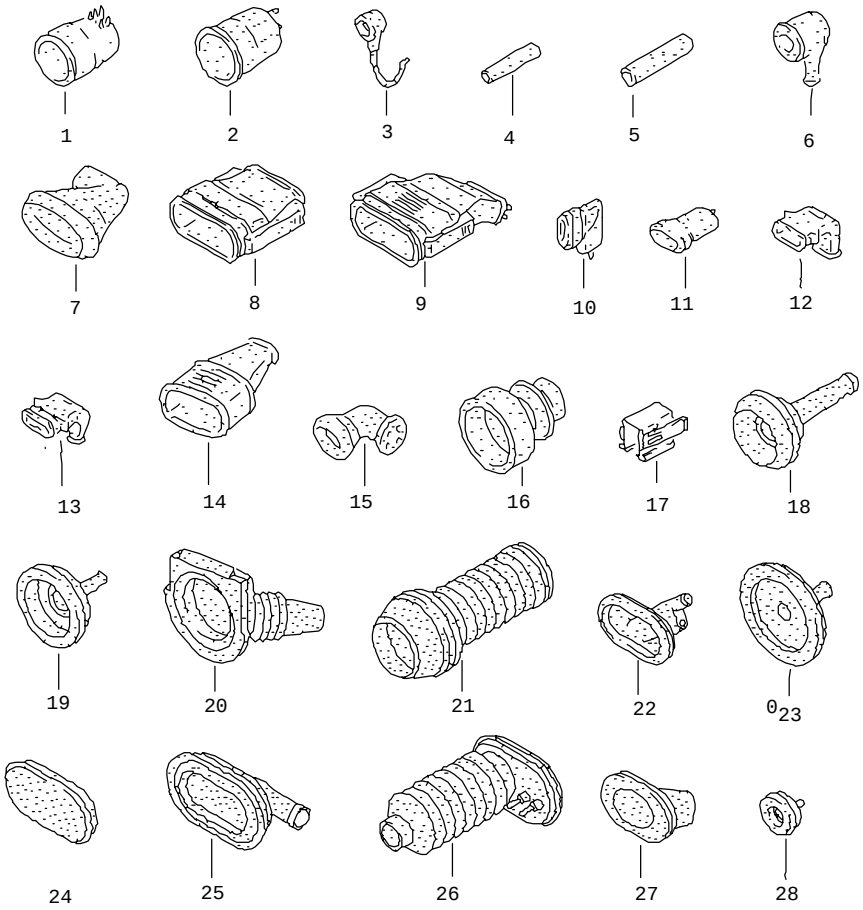

Pos	Part Number	Name	Remarks	Qty	Model
		grommet for connector housing	single wiring		
1	447 971 876	grommet	26X53,5	X	
2	443 971 876 A	grommet	27X48	X	
3	431 971 877	grommet with cable		X	
4	803 971 892	grommet	3X25	X	
5	803 971 896	grommet	4X30	X	
6	113 971 901 A	angled protective cap	12X6	X	
7	357 971 899 G	bracket		X	
8	171 972 509	boot	32,5X39	X	
9	191 972 509	angled protective cap		X	
10	443 972 525	grommet		X	
11	810 972 525	grommet	12,5X31	X	
12	867 972 525	protective cap		X	
13	867 972 525 A	protective cap		X	
14	867 972 525 B	grommet	26X13	X	
15	8A0 906 102	grommet	18X20,5	X	
16	4A0 941 189	grommet	28	X	
17	447 971 981	cap		X	
18	3B0 971 905	grommet loom for door	36/8 rear door	1	
19	1J0 971 913	grommet	36,7/4,5MM	X	
20	6N0 971 905 M	grommet	39/13	1	
21	6N4 971 916 A	grommet	41,5X36,8	X	
22	7M0 955 998	grommet	46	1	
23	1L0 971 913	grommet	46/6	1	
24	7M0 971 908 A	grommet	50X24	1	
25	2D0 906 376 D	grommet	67.4X13	1	
26	4D0 971 871 B	grommet	74X22	1	
27	4D0 971 863	grommet		1	

Pos	Part Number	Name	Remarks	Qty	Model
28	4D0 971 911	grommet		1	

Pos	Part Number	Name	Remarks	Qty	Model

Model	Year	MG	SG	Illustration	VIN No.	Update	16:33	18.02.20100	ETKA
EL	90	9	71	976-02		336			

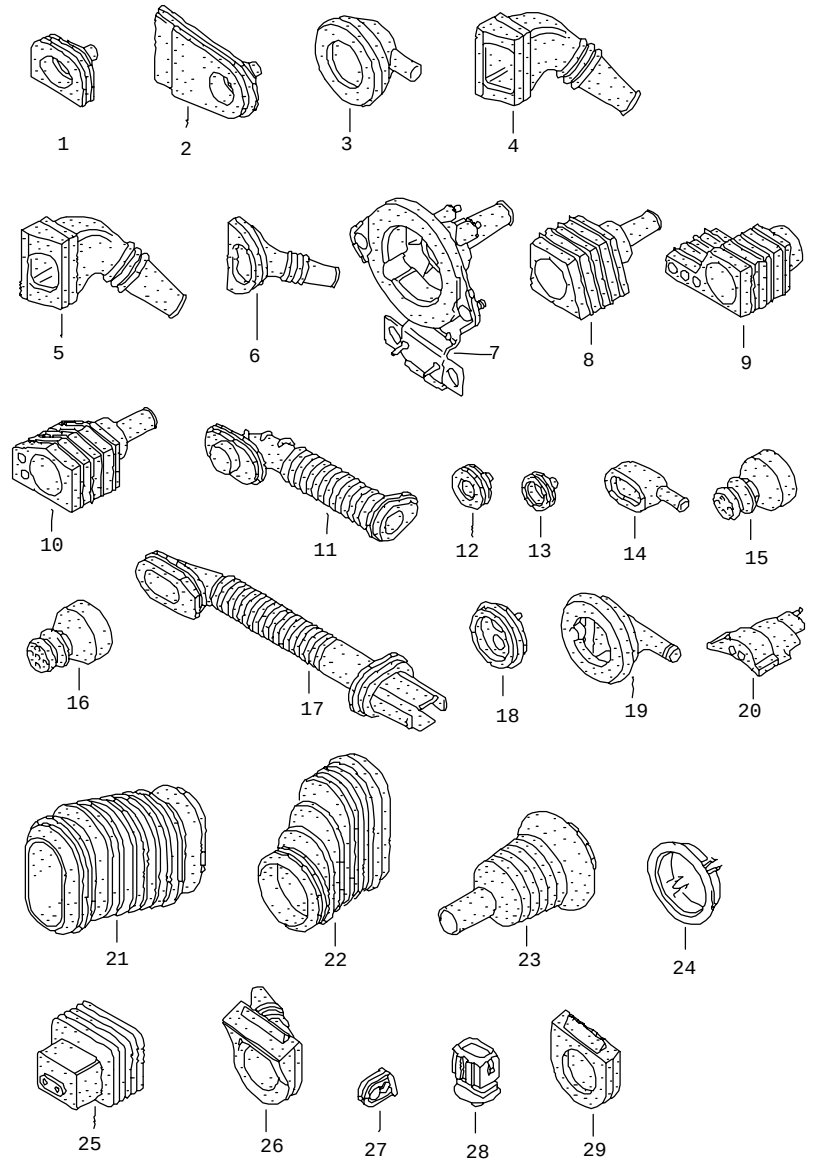

Pos	Part Number	Name	Remarks	Qty	Model
		grommet for connector housing			
1	1J0 941 389	grommet		1	
2	1J0 941 389 B	grommet		1	
3	1J0 971 903	grommet		1	
4	1J0 971 905	grommet		1	
5	1J0 971 905 B	grommet		1	
6	1J0 971 905 C	grommet		1	
7	1J0 971 915 C	grommet		1	
8	1J0 971 984 D	grommet		1	
9	1J0 971 984 E	grommet		1	
10	1J0 971 984 F	grommet		1	
11	1J6 971 840	grommet		1	
12	2D0 906 376 F	grommet		1	
13	2D0 906 376 H	grommet		1	
14	8D0 906 102 A	protective cap	angled	X	
15	4A0 941 189	grommet	28	1	
16	8D0 941 189	grommet		1	
17	4B9 971 840	grommet		1	
18	4B0 971 841 B	grommet	34MM	1	
19	4B0 971 908	grommet	41/8	1	
20	4B0 971 841 D	grommet wiring loom for fuel gauge sender		1	
21	8D0 959 845 F	bellows with retaining frame door	60X36/60X36 front	2	
22	8D0 959 845 E	bellows with retaining frame door	37,5X78,5/40 rear	2	
23	1H0 971 840 C	grommet		1	
24	1H0 973 132	ring	49.8X11.8	1	

Pos	Part Number	Name	Remarks	Qty	Model
25	8D0 906 102 B	grommet connecting piece flat contact housing fan		1	
26	1H0 971 905 J	grommet	39/6 rhd	1	
27	6H0 971 908	plug		1	
28	6N0 971 918 A	plug		1	
29	6N0 971 908 C	plug		1	

Pos	Part Number	Name	Remarks	Qty	Model

Model	Year	MG	SG	Illustration	VIN No.	Update	16:36	18.02.20100	ETKA
EL	90	9	71	976-03		336			

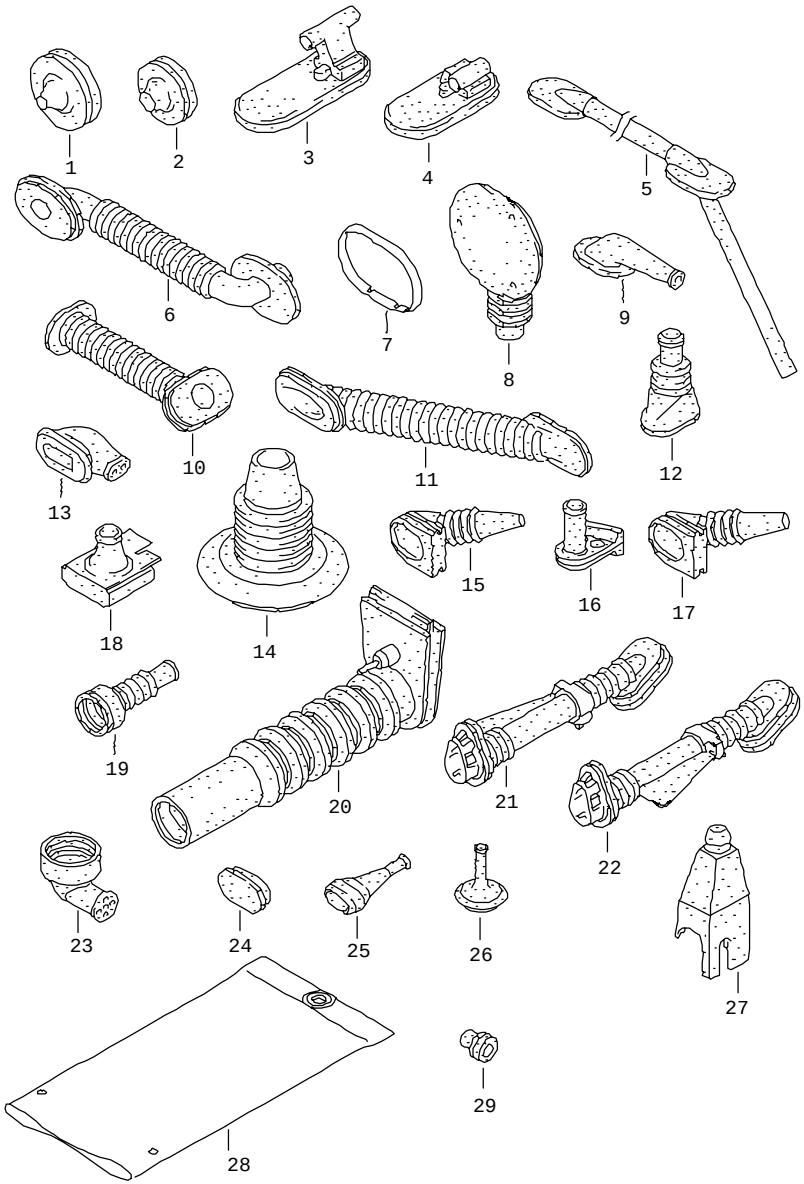

Pos	Part Number	Name	Remarks	Qty	Model
		grommet for body			
1	2D0 906 376 M	grommet side marker light		1	
2	2D0 906 376 N	grommet for additional heater		1	
3	3B0 955 837 B	grommet spraying jet	left	1	
4	3B0 955 837 C	grommet spraying jet	right	1	
5	3B5 971 840	grommet flap, rear		1	
6	3B9 971 840	grommet flap, rear		1	
7	3B9 971 905	grommet flap, rear		1	
8	4A0 945 527	grommet towing attachment (ball type)		1	
9	6K5 971 907	grommet		X	
10	6K6 971 840 B	grommet		1	
11	6K9 971 840 A	grommet		1	
12	7D0 945 527	grommet		1	
13	7M0 927 909	grommet		1	
14	7M0 971 840 C	grommet		1	
15	7M0 971 905 B	grommet		1	
16	7M0 971 905 L	grommet		1	
17	7M0 971 905 D	grommet		1	
18	7M0 971 905 F	grommet		1	
18	7M0 971 905 F	grommet		1	
19	8D0 972 525	grommet		1	5 speed automatic
20	8D2 971 871 B	grommet loom for engine compartment	rhd	1	

Pos	Part Number	Name	Remarks	Qty	Model
21	6X0 971 829 B	grommet loom for luggage compl. rear		1	
22	6X0 971 829 C	grommet loom for luggage compl. rear	right upper	1	
23	8L0 941 189	grommet		1	
24	7M0 971 908 B	grommet	16X32	1	
25	893 906 102	grommet	17,5X22	1	
26	7M0 971 913	grommet	24X4,5	1	
27	7M0 971 841 B	grommet		1	
28	2D0 906 376	grommet	220X112	1	
29	2D0 906 376 C	grommet	22MM	1	

Pos	Part Number	Name	Remarks	Qty	Model

Model	Year	MG	SG	Illustration	VIN No.	Update	16:37	18.02.20100	ETKA
EL	90	9	71	976-05		336			

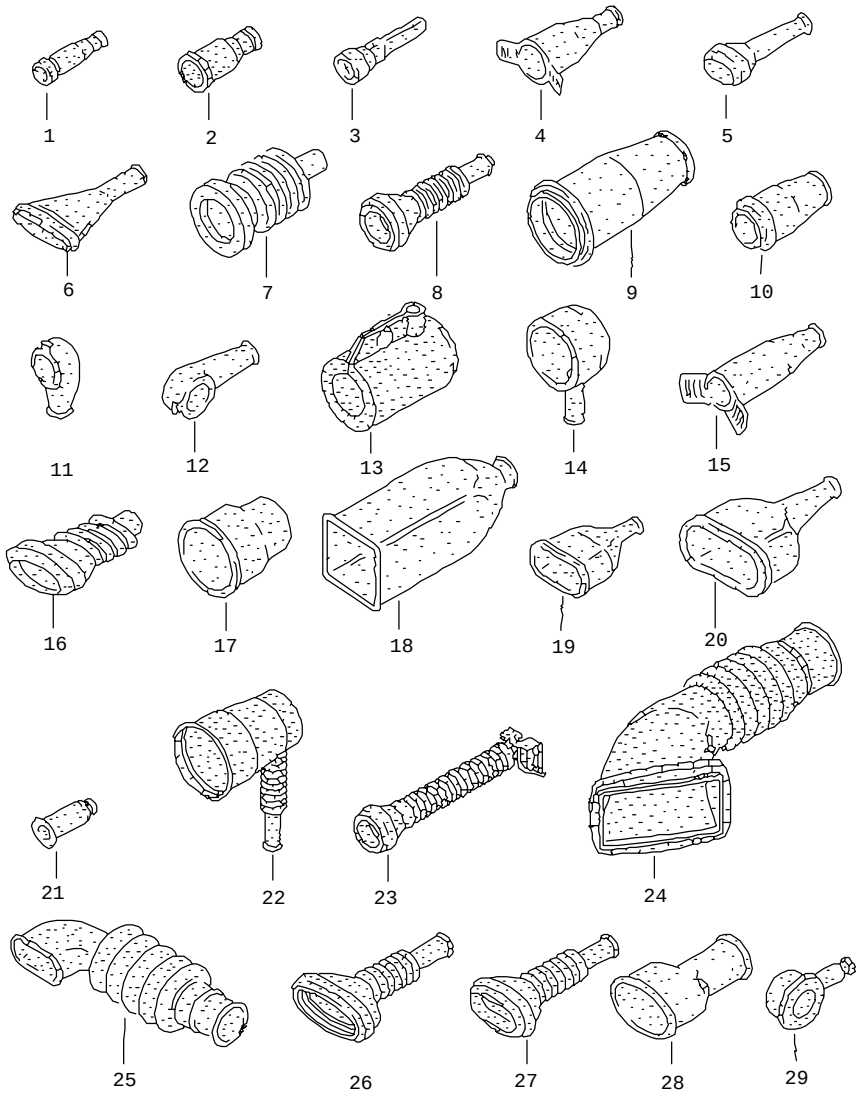

Pos	Part Number	Name	Remarks	Qty	Model
		grommet for connector housing			
1	035 905 387	grommet		X	
2	311 905 429 A	protective cap		X	
3	211 906 101	protective cap	10,5X2	X	
4	311 906 101 A	protective cap	18,5X4,5	X	
5	022 906 102	protective cap	39X7,5	X	
6	022 906 102 B	protective cap		X	
7	443 906 102 F	grommet	8X20	X	
8	443 906 102 G	grommet		X	
9	357 906 376	protective cap	27X20	X	
10	191 906 376 A	protective cap	20,5X11	X	
11	251 911 521	protective cap	18,5X8	X	
12	251 911 521 A	protective cap	17,5X13	X	
13	251 911 521 B	protective cap		X	
14	447 941 189	grommet	39,5X6,5	X	
15	411 941 539	protective cap	18,5X5	X	
16	853 945 521	grommet		X	
17	171 953 175 A	cap	40X4	X	
18	803 957 855 B	grommet	24X5	X	
19	431 971 866	grommet	19X6	X	
20	251 971 867	protective cap	38X8	X	
21	811 971 867	grommet	10X32	X	
22	4A0 971 876	grommet	29X2,5	X	
22	4A0 971 876	grommet	29X2,5	X	
23	4A0 971 908 A	grommet		X	
25	867 972 511	grommet	22,5X16	X	
26	4A0 906 102	grommet	30	X	
27	4A0 906 102 A	grommet		X	

Pos	Part Number	Name	Remarks	Qty	Model
28	022 906 241	protective cap		X	
29	431 971 864	grommet		X	

Pos	Part Number	Name	Remarks	Qty	Model

Model	Year	MG	SG	Illustration	VIN No.	Update	16:37	18.02.20100	ETKA
EL	90	9	71	976-06		336			

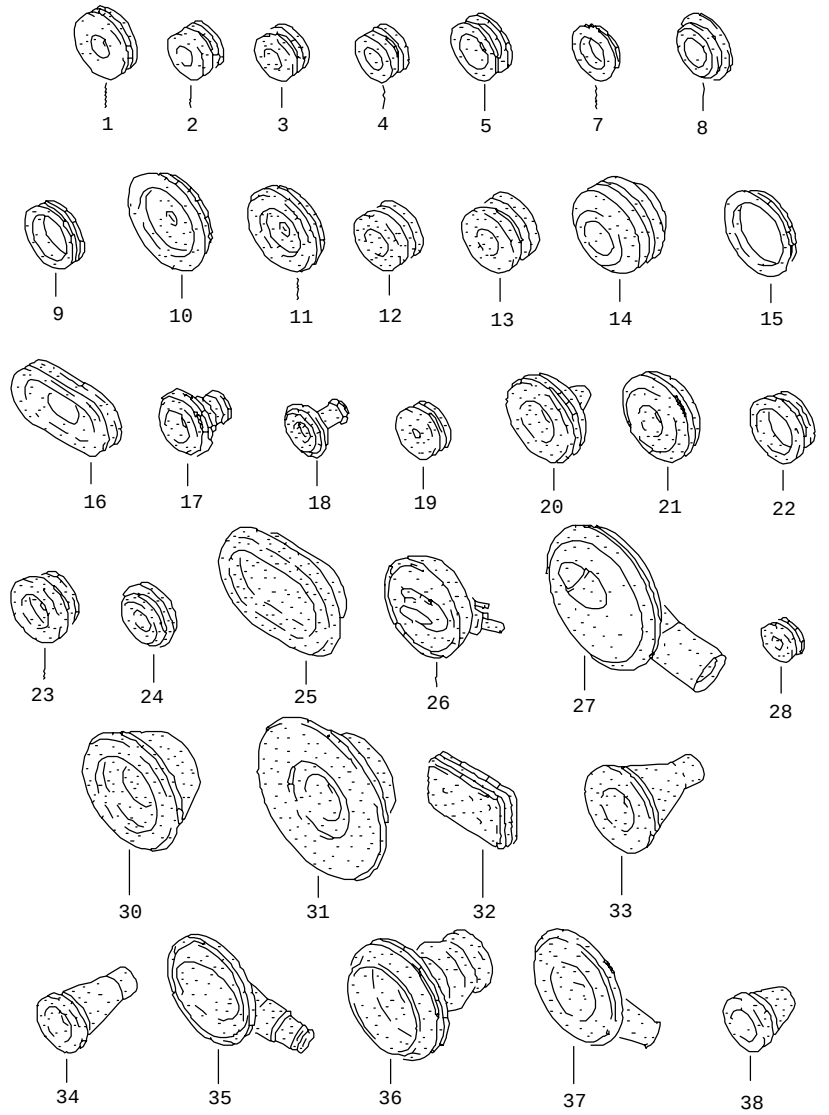

Pos	Part Number	Name	Remarks	Qty	Model
		grommet for body			
1	N 020 085 1	grommet	16X10	X	
2	4B0 971 908 A	grommet	11/8	X	
3	N 020 092 1	grommet	12X8,5	X	
4	N 900 377 01	grommet	10X15X2	X	
5	--- --- ---	no longer available	15,5X19X5	X	
7	N 900 999 01	grommet	15X17X0,2	X	
8	N 901 004 01	grommet	12,8X21	X	
9	N 904 655 01	grommet	20,5X24,2X1,8	X	
10	021 119 569	grommet	29,5/6	X	
11	021 119 569 A	grommet	23,5/6	X	
12	052 129 669	grommet	16,5/10,5	X	
13	055 129 669	rubber mounting	17/11,8	X	
15	181 261 861	grommet	25/23	X	
16	321 609 737	grommet	40X16,5/ 15,5X8,5	X	
17	311 611 743	grommet	20/4	X	
18	171 611 751	grommet	15/4	X	
19	211 611 751	grommet	14/4,5	X	
20	803 611 751	grommet	22/3	X	
21	171 611 819	grommet	17/11	X	
22	211 711 487	grommet	22,1/18	X	
23	4D0 971 911	grommet	17/8,5	X	
24	171 823 395	rubber mounting	16/6,2	X	
(24)	321 819 063	grommet	13/9	1	
25	443 831 469 A	grommet	50X30,5	X	
26	4D0 862 114	grommet	28	X	
(27)	4D0 877 242 B	drain tube	40/14	X	
28	861 877 399	grommet	9	X	

Pos	Part Number	Name	Remarks	Qty	Model
30	311 906 105	grommet	33/8,5	X	
31	311 906 105 A	grommet	48,5/8,5	X	
32	165 941 140	grommet	25,2X14,4	X	
33	113 941 189	grommet	24/6	X	
34	411 941 189	grommet	20/4	X	
35	431 941 189	grommet	32/5	X	
36	443 941 189	grommet	32	X	
37	823 941 189 A	grommet	32/5	X	
38	141 941 199 A	grommet	14,5/6	X	

Pos	Part Number	Name	Remarks	Qty	Model

Model	Year	MG	SG	Illustration	VIN No.	Update	16:37	18.02.20100	ETKA
EL	90	9	71	976-07		336			

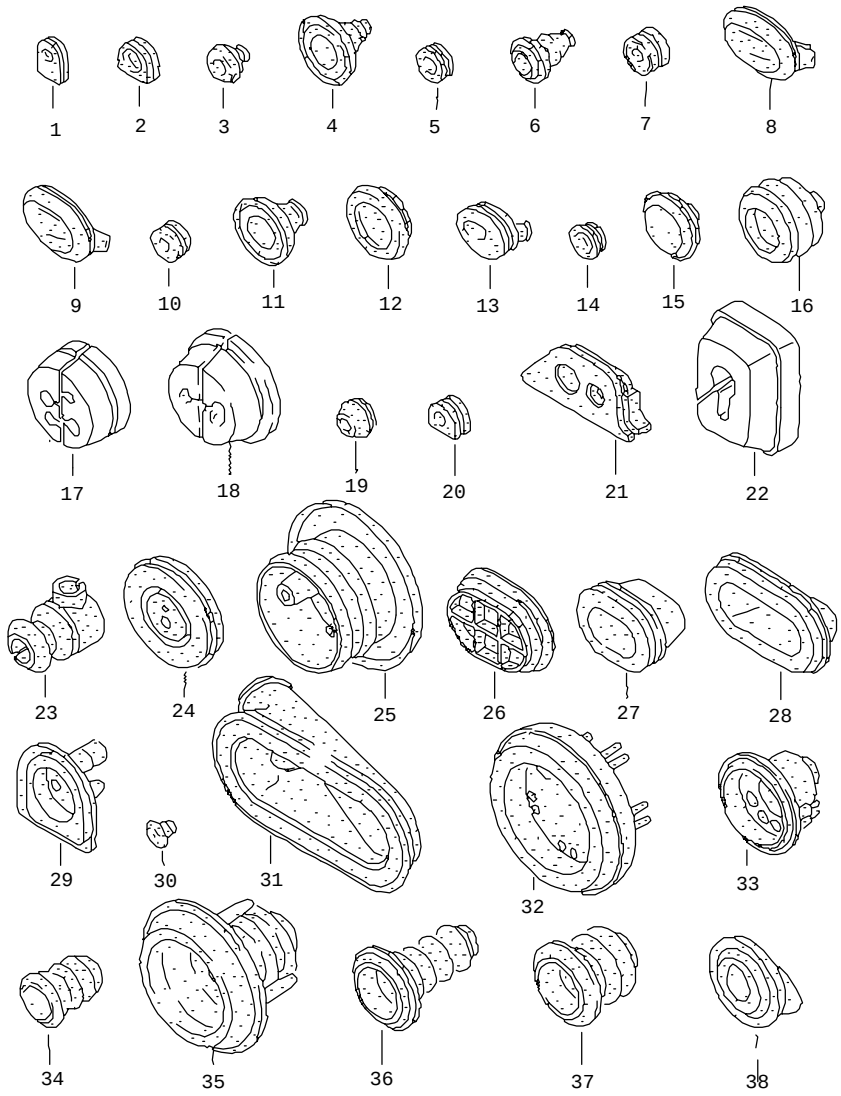

Pos	Part Number	Name	Remarks	Qty	Model
		grommet for body			
1	361 943 169 A	grommet	12/5	X	
2	211 945 179	grommet	15/6	X	
3	311 949 149 B	grommet	13/5	X	
4	823 953 331	grommet	20/5	X	
5	331 955 754	grommet	13/9	X	
6	445 955 754 A	grommet	13/4,5	X	
7	431 955 995	grommet	16/5	X	
8	1J0 955 998 B	grommet	36X25/5,5/3	X	
9	--- --- --- .	discontinued / replacement:	1J0 955 998 B	X	
10	113 957 855	grommet	14/9	X	
11	803 957 855	grommet	22/6,4	X	
12	171 957 857	plug	28	X	
13	111 957 861	grommet	22,5X14,5/6,1	X	
14	--- --- --- .	discontinued / replacement:	052 129 669	X	
15	251 957 861	grommet	33/6	X	
16	357 957 861	grommet	28/6,4	X	
17	443 959 841	grommet	63	X	
18	853 959 841	grommet	40	X	
19	803 959 843	grommet	12,5/4	X	
20	861 971 239	grommet	14/6	X	
21	893 971 239 A	grommet	---	X	
22	441 971 841	grommet	52X37X2	X	
22	441 971 841	grommet	52X37X2	X	
23	443 971 841	grommet	27/10	X	
24	4A0 971 841 A	grommet	41	X	
25	4A0 971 841 B	grommet	50	X	
26	4A0 971 841 E	grommet	48X32	X	

Pos	Part Number	Name	Remarks	Qty	Model
27	447 971 863	grommet	34,5X19/ 25X15,5	X	
28	447 971 863 A	grommet	56X27/40X11	X	
29	893 971 863 C	grommet	31	X	
30	811 971 868	grommet	11/4,2	X	
31	321 971 870	grommet	81,5X41/20	X	
32	4A0 971 871	grommet	61	X	
33	447 971 871	grommet	59/16	X	
34	811 971 871	grommet	33,5/18	X	
35	893 971 871	grommet	56,5/15	X	
36	443 971 871 A	grommet	48,5/11	X	
37	811 971 871 A	grommet	47/15	X	
38	431 971 872	grommet	36/6	X	

Pos	Part Number	Name	Remarks	Qty	Model

Model	Year	MG	SG	Illustration	VIN No.	Update	16:37	18.02.20100	ETKA
EL	90	9	71	976-08		336			

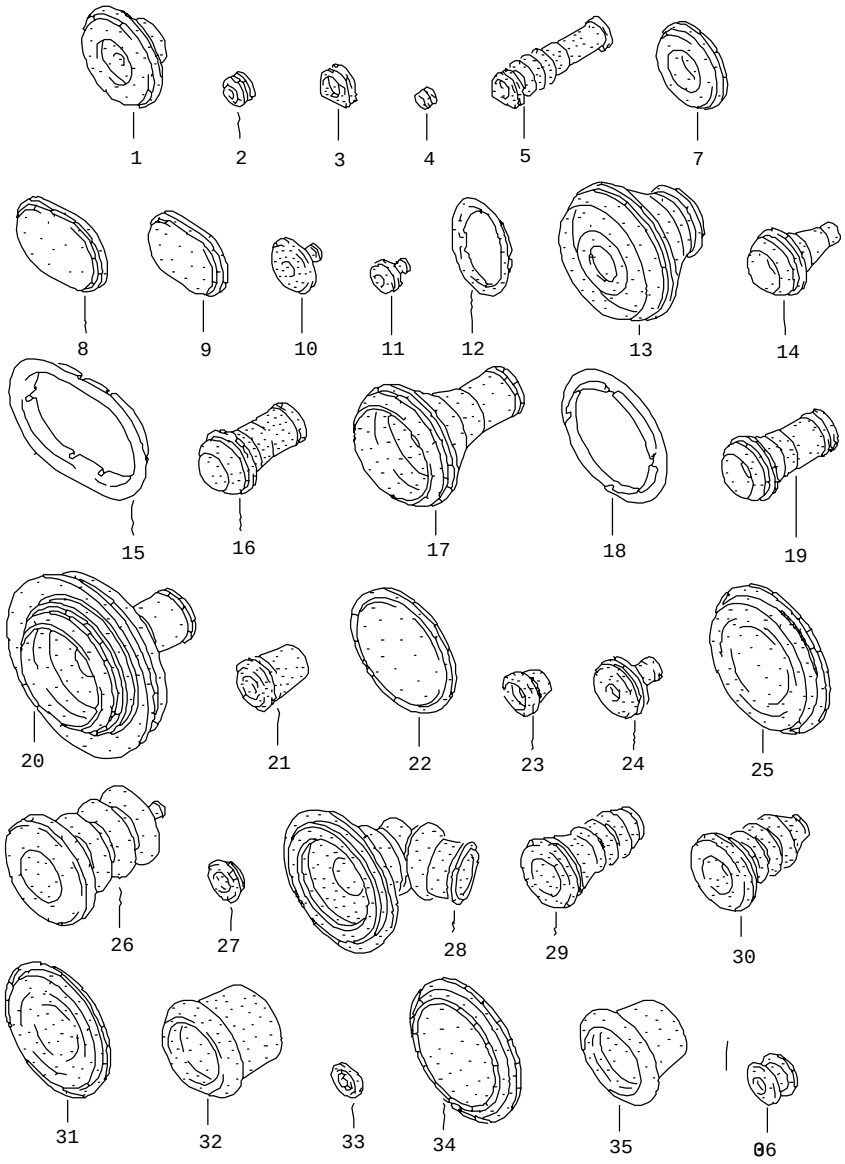

Pos	Part Number	Name	Remarks	Qty	Model
		grommet for body			
1	867 971 872	grommet	39,5/8	X	
2	803 971 873	grommet	12/8	X	
3	251 971 878	grommet	19	X	
4	803 971 878	grommet	9/6	X	
5	251 971 878 C	grommet	19/11,5	X	
7	155 971 904	plug	33/20	X	
8	333 971 904	plug	28,7/38,8	X	
9	333 971 904 A	plug	22,5/38,5	X	
10	111 971 905	grommet	28/5	X	
11	321 971 905	grommet	16,5/1,7	X	
12	251 971 905 A	grommet	62X38/59X35	X	
13	357 971 905 A	grommet	52/16	X	
14	171 971 905 B	grommet	33,5/6	X	
15	251 971 905 B	grommet	62X44	X	
16	171 971 905 C	grommet	33,5/11	X	
17	251 971 905 C	grommet	52X16	X	
18	357 971 905 C	plug	51	X	
19	171 971 905 D	grommet	33,5/16	X	
20	357 971 905 E	grommet	46/16	X	
21	111 971 907	grommet	24/8,5	X	
22	191 971 907	grommet	46/39	X	
23	311 971 907	grommet	23,5/4	X	
23	311 971 907	grommet	23,5/4	X	
24	021 971 907 A	grommet	33/9	X	
25	357 971 908	plug	60	X	
26	4A0 971 908	grommet	35/5	X	
27	431 971 908	grommet	23,5	X	

Pos	Part Number	Name	Remarks	Qty	Model
28	443 971 908	grommet	50/16	X	
29	447 971 908	grommet	40/15	X	
30	811 971 908	grommet	40/8	X	
31	357 971 908 A	plug	49,5	X	
32	893 971 908 A	grommet	37/16	X	
33	191 971 908 B	plug	19,5	X	
34	357 971 908 B	plug	50/54	X	
35	893 971 908 C	grommet	33/8	X	
36	893 971 908 F	grommet	6X12,5	X	

Pos	Part Number	Name	Remarks	Qty	Model

Model	Year	MG	SG	Illustration	VIN No.	Update	16:38	18.02.20100	ETKA
EL	90	9	71	976-09		336			

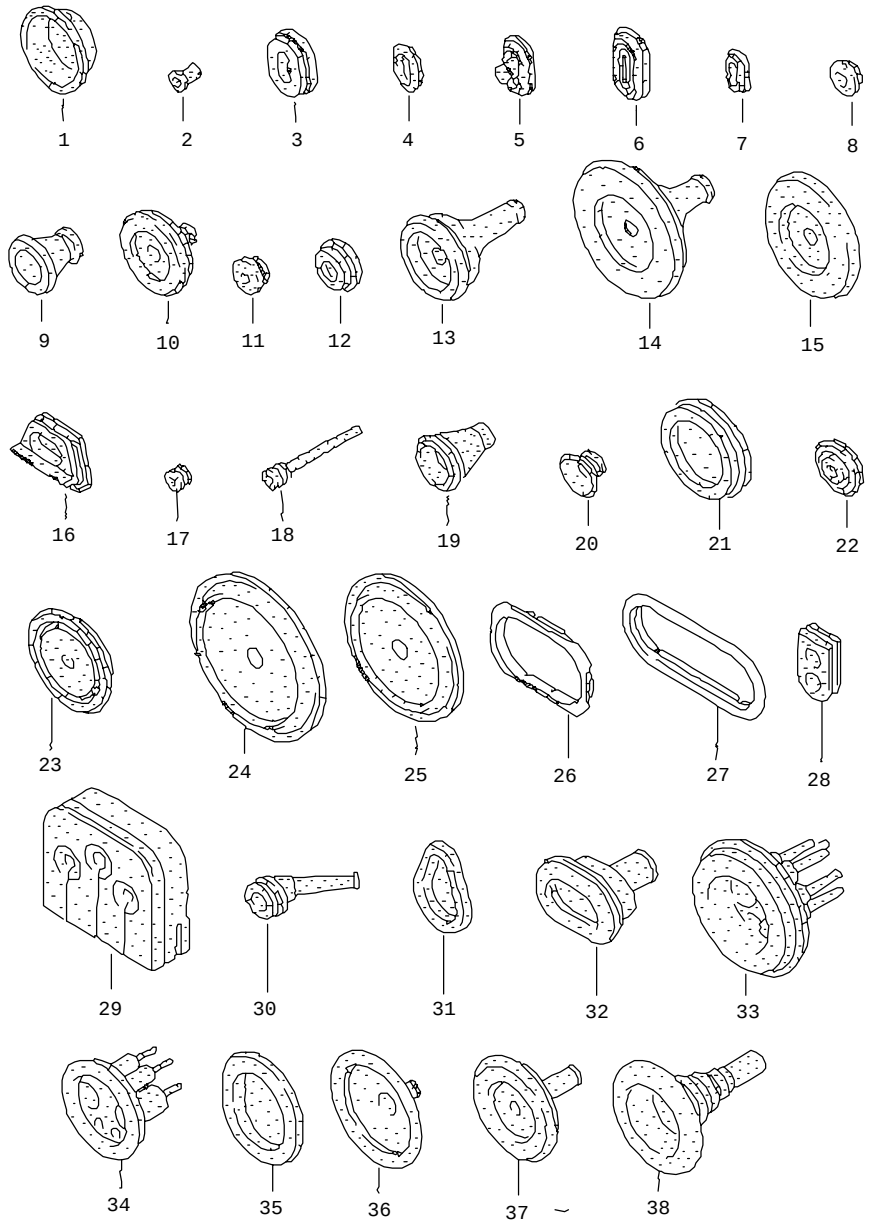

Pos	Part Number	Name	Remarks	Qty	Model
		grommet for body			
1	111 971 909	grommet	51/12	X	
2	811 971 909	sealing bush	11,5X3,2	X	
3	171 971 910	plug	22X15/14X7	X	
4	191 971 910	plug	28X14/2,2	X	
5	331 971 910	grommet	21,8X11/4	X	
6	701 971 910	plug	28X14	X	
7	1H6 971 910 A	plug	6,8X15,5	X	
8	111 971 911 A	grommet	16,5	X	
9	211 971 911 A	grommet	17/3,5	X	
11	171 971 913	grommet	12,5	X	
12	311 971 913	grommet	12,5/2	X	
13	357 971 913 A	grommet		X	
14	1H0 971 913 B	grommet	46/7	X	
15	147 971 915	grommet	39,5/8	X	
16	191 971 915	grommet		X	
17	481 971 915	grommet	9,5/2,4	X	
18	143 971 919	grommet	10/4	X	
19	323 971 919	grommet	28/11	X	
20	113 971 923	cap	22	X	
21	191 971 926 B	grommet	33,5	X	
22	191 971 928	grommet	27	X	
23	867 971 928	plug	38	X	
23	867 971 928	plug	38	X	
24	1H0 971 908	plug	70	X	
25	1H4 971 908	plug	64	X	
26	701 971 905 B	grommet	45X30/41X26	X	
27	701 971 905 A	grommet	65X22/61X19	X	

Pos	Part Number	Name	Remarks	Qty	Model
28	701 971 878	grommet	20X23	X	
29	8G0 971 239 B	grommet	19X6	X	
30	895 955 754 A	grommet		X	
31	1H0 971 908 E	plug	30X20X16	X	
32	701 957 861	grommet	34X24/8	X	
33	4A2 971 871	grommet		X	
34	4A0 971 908 B	grommet	31	X	
35	191 971 904	grommet		X	
36	701 971 908 A	grommet	38,8/4	X	
37	1H0 971 913 C	grommet	33,5,6/10	X	
38	8A0 971 908	grommet	32/3,5	X	

Pos	Part Number	Name	Remarks	Qty	Model

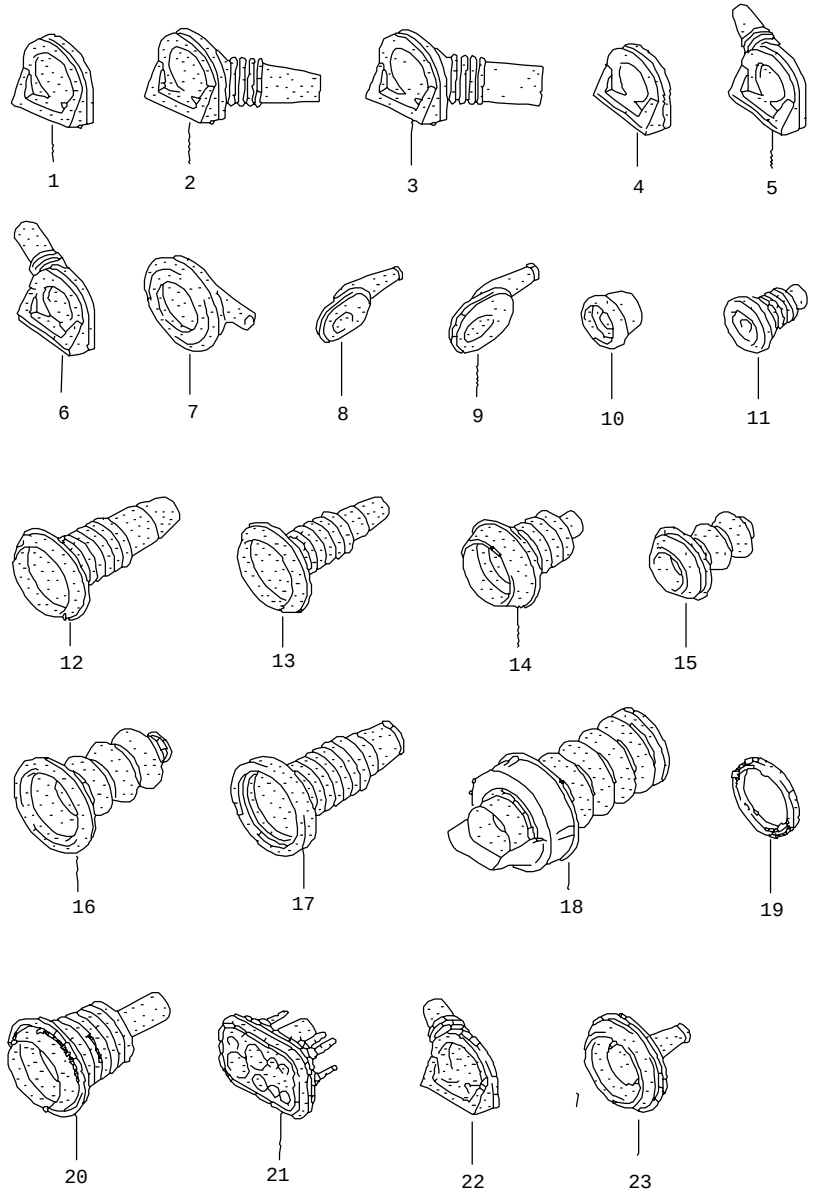

Pos	Part Number	Name	Remarks	Qty	Model
		grommet for body			
1	1H2 971 908	plug		X	
2	1H0 971 905 K	grommet	39/12	X	
(2)	1H0 971 905	grommet	39/13	X	
3	1H0 971 905 D	grommet	39/19	X	
4	1H0 971 908 A	plug		X	
5	1H0 971 905 A	grommet	31/6	X	
6	1H0 971 905 E	grommet	31/15	X	
7	4D0 971 908 B	grommet	41/8	X	
8	1H5 971 907 C	grommet		X	
9	1H5 971 907 B	grommet		X	
10	357 971 907	grommet	23,5/10	X	
11	1H0 971 919	grommet	24/7	X	
12	1H0 971 840 B	grommet	12,5X46	X	
13	1H0 971 840	grommet	46/10,5	X	
14	8A0 971 841	grommet	47	X	
15	811 971 877	grommet		X	
16	893 971 908 G	grommet	51X13	X	
17	1H0 971 840 A	grommet	52,3/17	X	
18	3A0 971 611	bellows	41,5/31,5	X	
(18)	1H4 971 611 A	bellows		X	
19	3A0 959 750	sealing washer only for:	3A0 959 740 6N0 959 740	1	
19	3A0 959 750	sealing washer only for:	3A0 959 740 6N0 959 740	1	
20	1H0 971 840 C	grommet		1	
21	8D0 971 871 D	grommet	60X40	1	
22	1H0 971 905 G	grommet	39/13	1	

Pos	Part Number	Name	Remarks	Qty	Model
23	6N0 971 915 B	grommet	52,3/9	1	

Pos	Part Number	Name	Remarks	Qty	Model

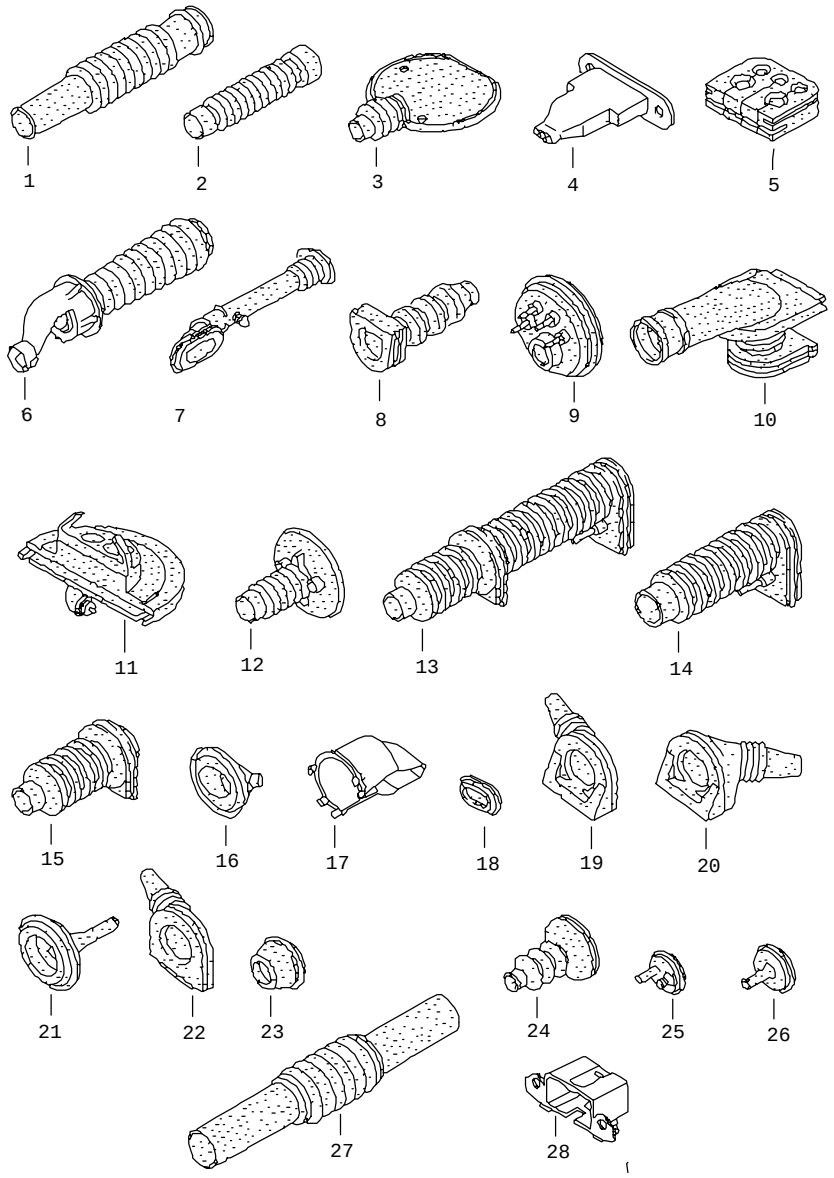

Pos	Part Number	Name	Remarks	Qty	Model
		grommet for body			
1	701 906 376	protective cap	32/20	1	
2	4A0 941 189 C	bellows	12/18X115	1	
3	8D0 945 527	gasket socket towing attachment (ball type)		1	
4	701 959 379	grommet		1	
5	8G0 971 239 C	grommet	19X6	1	
6	6N0 971 611 E	bellows		1	
7	6N0 971 840	grommet loom for luggage compl. rear		1	
8	8D0 971 841 A	grommet	20/16	1	
9	4A2 971 871 B	grommet	rhd	1	
10	4D0 971 871	grommet		1	
11	441 971 871 D	grommet		1	
12	8D0 971 871	grommet	51/15	1	
13	8D0 971 871 A	grommet loom for engine compartment	30/19 lhd	1	
14	8D2 971 871	grommet loom for engine compartment	30/26 rhd	1	
15	8D2 971 871 A	grommet loom for engine compartment	26/26 rhd	1	
16	4D0 971 872 A	grommet		1	
17	6N0 971 883	cap clutch loom for veh. lighting	 front	1	
18	1E0 971 904	plug		2	
19	1H0 971 905 H	grommet	39/5	1	
20	1H0 971 905 K	grommet	39/12	1	
21	6N0 971 905 E	grommet	51/7	X	
22	6N0 971 905 L	grommet	39/5	1	
(22)	6N0 971 905 J	grommet		1	

Pos	Part Number	Name	Remarks	Qty	Model
23	8A0 971 908 B	grommet	33/5	1	
24	893 971 908 H	grommet	51X6	1	
25	1H0 971 913 C	grommet		1	
26	3A0 971 913 A	grommet	35/10,5	1	
27	535 971 916 A	bellows	33,5/31,5/38,5	X	
28	535 972 633	cap for diagnosis plug		1	

Pos	Part Number	Name	Remarks	Qty	Model

Model	Year	MG	SG	Illustration	VIN No.	Update	16:39	18.02.20100	ETKA
EL	90	9	71	976-12		336			

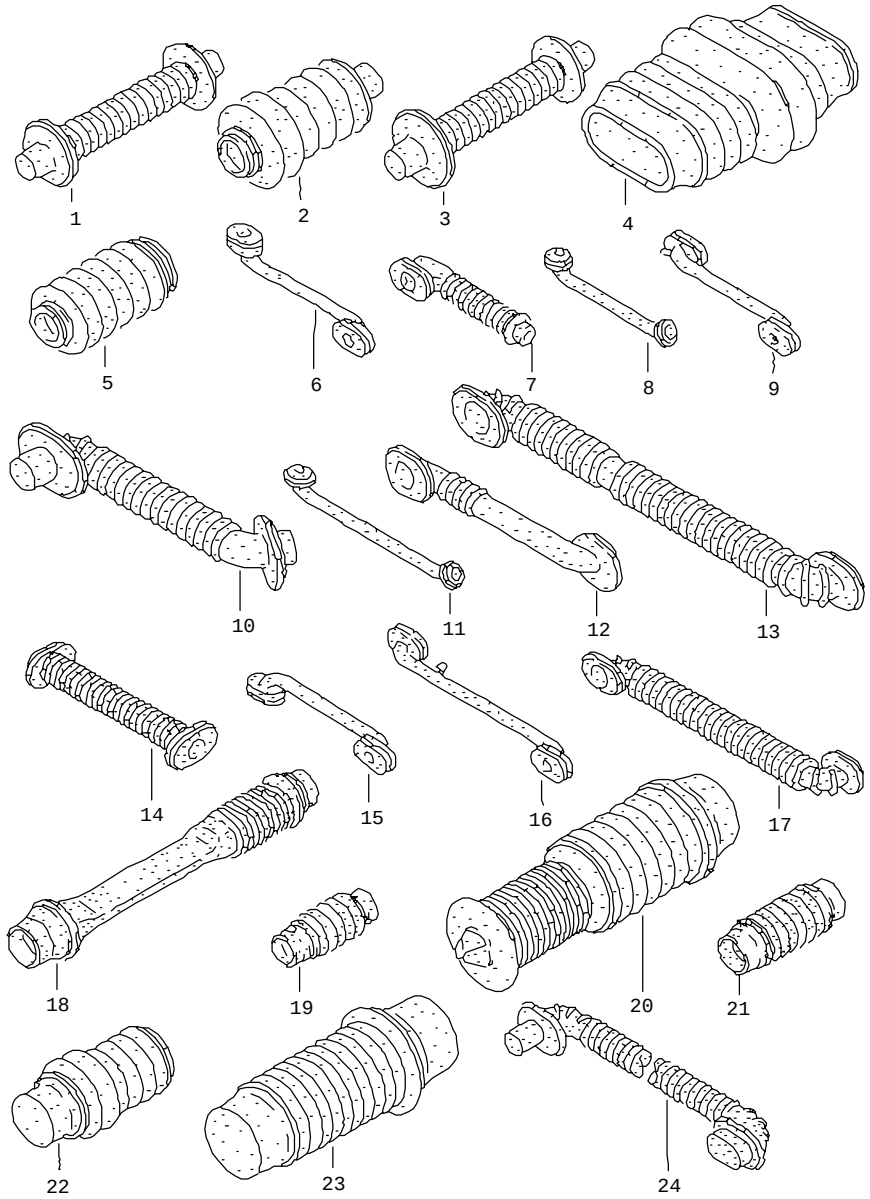

Pos	Part Number	Name	Remarks	Qty	Model
		grommet for body			
1	155 959 845	bellows	27/27MM	X	
2	433 959 845	bellows	30/23/30	X	
3	155 959 845 A	bellows	27/15/32,5	X	
4	4A0 959 845 C	bellows	52X30/47X27/ 50X30	X	
5	433 959 847	bellows	22/19/24	X	
6	171 971 840	grommet	22X15/10/22X15	X	
7	191 971 840	grommet	22/14/31,1X21	X	
8	251 971 840	grommet	12,5/9/12,5	X	
9	321 971 840	grommet	22X15/10/22X15	X	
10	333 971 840	bellows	39X29/18/38X22	X	
11	--- --- ---	no longer available	12,5/9/12,8	X	
12	535 971 840	grommet	21X31X120	X	
13	701 971 840 D	bellows	38X22,8/18/	X	
14	867 971 840	grommet	22/10/22	X	
15	171 971 840 A	grommet	22X15/10/22X15	X	
16	321 971 840 A	grommet	22X15/10/22X15	X	
17	867 971 840 A	grommet	22X15/12,8/	X	
18	255 971 916	bellows	33,7/26/30,7	X	
19	321 971 916	bellows	27,5/25/27,5	X	
20	701 971 916	bellows	45,5/51,5/ 42,5/45,5	X	
21	191 971 916 A	bellows	33,5/30,5/33,5	X	
21	191 971 916 A	bellows	33,5/30,5/33,5	X	
22	357 971 916 A	bellows	33,5X38,5	X	
23	357 971 916 C	bellows	60,5/43/48,5	X	
24	701 971 840 A	bellows	39,1X29/18/ 39,1X29	X	

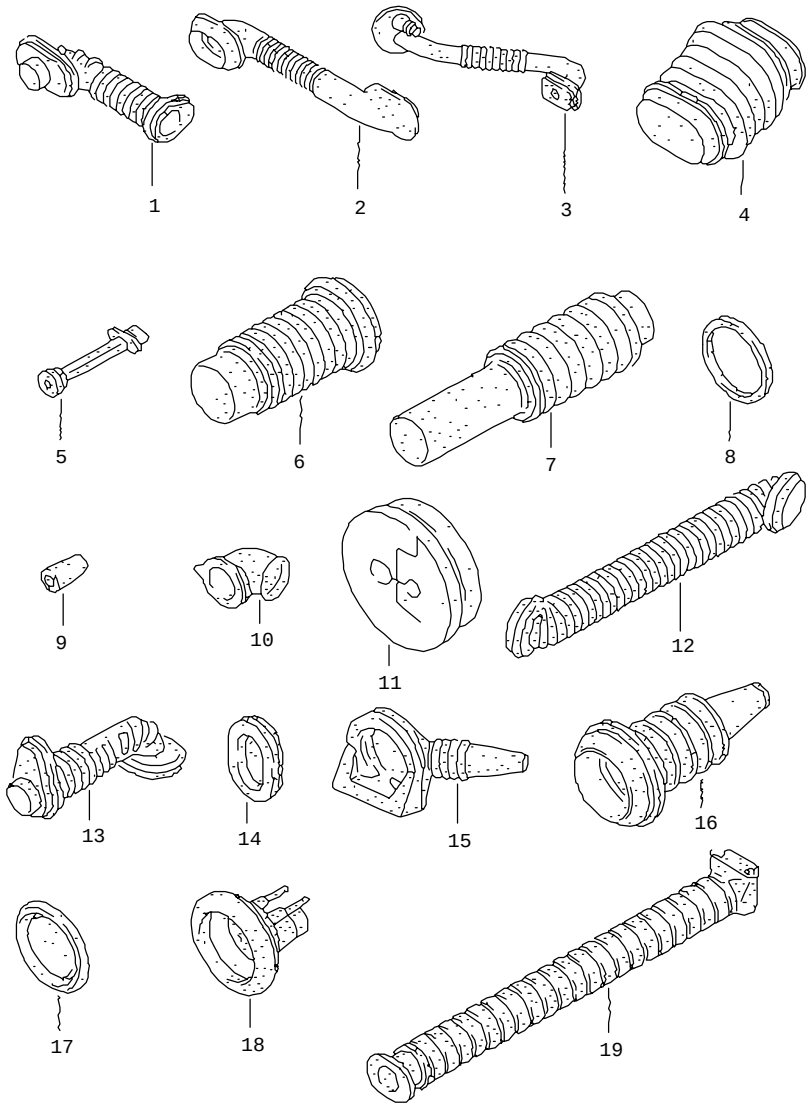

Pos	Part Number	Name	Remarks	Qty	Model
		grommet for body			
1	1H6 971 840	grommet	38,8X28,8/17/ 31X21	X	
2	4A9 971 840	grommet		X	
3	895 971 840	grommet		X	
4	4A0 959 845 B	bellows	60/36/55X33/ 60X36	X	
5	1H6 971 910	grommet		X	
6	1H0 971 916 A	bellows	48,5/36/66	X	
7	535 971 916	bellows	38,5/33,5/38,5	X	
8	N 904 655 01	grommet	20,5X24,2X1,8	X	
9	N 905 530 01	protective cap	3,2	X	
10	1H0 907 545	grommet		X	
11	8A0 959 841 A	grommet	65	X	
12	1E0 971 840	grommet	35X25/35X25	X	
13	1H9 971 840	grommet	27,5/24,8X43,5	X	
14	1H9 971 904	plug	24,5X38,5	X	
15	1H0 971 905 B	grommet	39/6	X	
16	1H0 971 840	grommet	46/10,5	1	
17	1H4 971 908 A	plug	41	1	
18	8A0 971 908 C	grommet	52/13	1	
19	281 971 916	bellows		1	

Model	Year	MG	SG	Illustration	VIN No.	Update	16:39	18.02.20100	ETKA
EL	90	9	71	977-01		336			

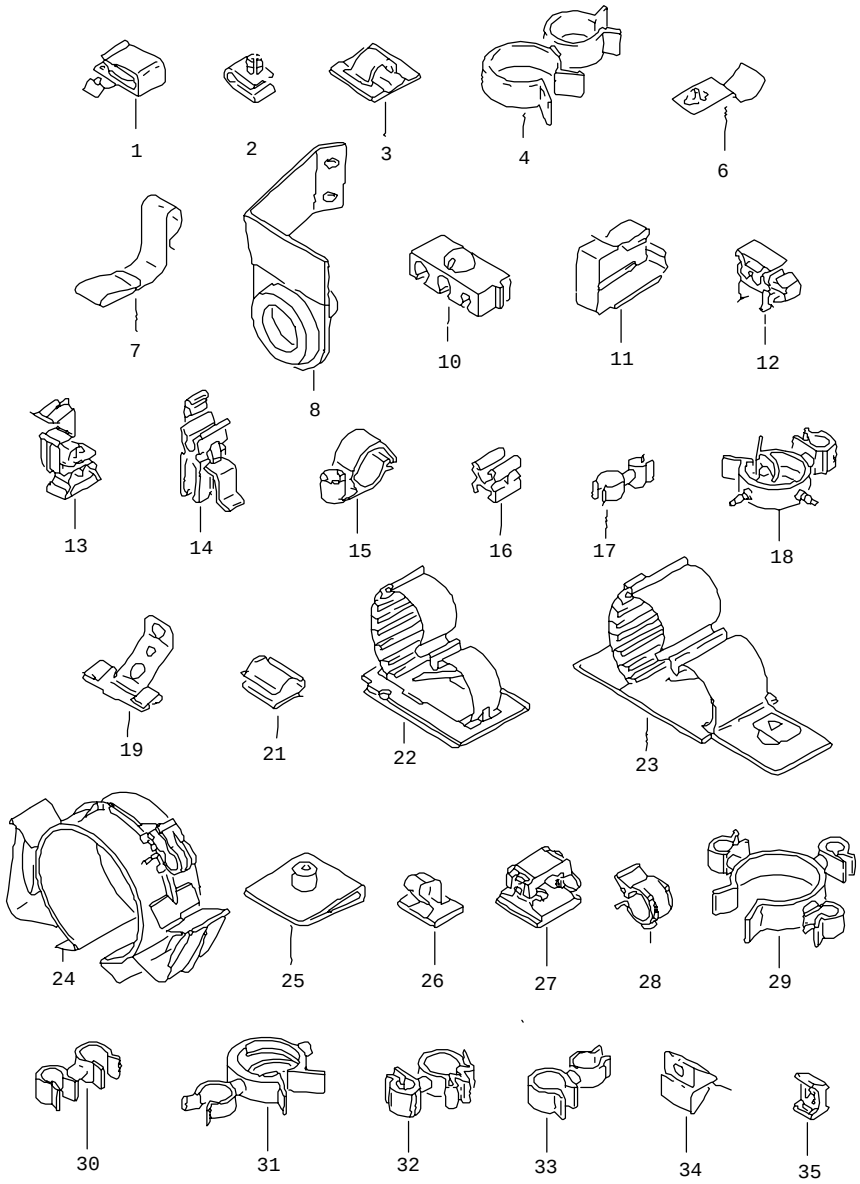

Pos	Part Number	Name	Remarks	Qty	Model
		clip cable holder			
1	191 611 797 C	bracket		X	
2	291 711 245 A	clip	8X5	X	
3	4D0 971 739	clip, self-adhesive	8-10	X	
4	431 819 595	retainer, swivelling	18/25	X	
6	111 863 157	retaining clip	4,1	X	
7	431 867 460	clamp		X	
8	859 905 369 A	cable holder		X	
10	211 905 451	holder for ignition leads	13,2X8,2	X	
11	443 953 269 C	bracket		X	
12	357 955 747	bracket for hose		X	
13	191 955 747 A	bracket for hose		X	
14	867 955 747 B	bracket for hose		X	
15	--- --- --- .	discontinued / replacement:	N 906 288 01	X	
16	445 955 846	clip		X	
17	171 957 787	bracket		X	
18	701 957 787	retainer, swivelling	24/8MM	X	
19	--- --- ---	no longer available		X	
21	803 959 849	bracket		X	
22	357 971 004	cable holder		X	
23	357 971 005	cable holder		X	
24	535 971 359	cable holder	56.5	X	
25	893 971 739	clip		X	
26	251 971 739 A	bracket, self-adhesive		X	
27	357 971 739 A	bracket, self-adhesive		X	
28	155 971 787 A	holder	12,8	X	
29	867 971 787 A	retainer, swivelling	34/36	X	
30	155 971 787 B	retainer, swivelling	9/10	X	

Pos	Part Number	Name	Remarks	Qty	Model
31	281 971 787 C	retainer, swivelling	12/24	X	
32	701 971 787 P	bracket		X	
33	281 971 812	retainer, swivelling	13/14	X	
34	171 971 836 A	cable terminal		X	
35	867 971 838	bracket		X	

Pos	Part Number	Name	Remarks	Qty	Model

Model	Year	MG	SG	Illustration	VIN No.	Update	16:39	18.02.20100	ETKA
EL	90	9	71	977-02		336			

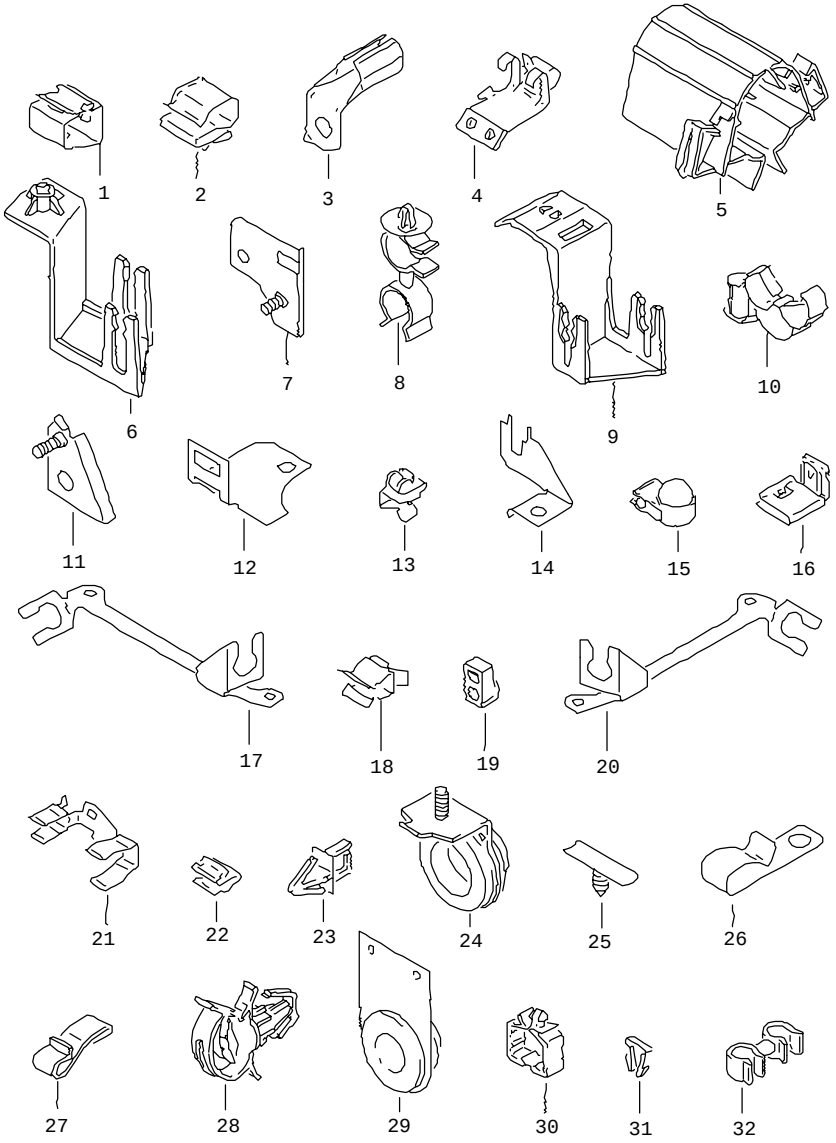

Pos	Part Number	Name	Remarks	Qty	Model
		clip cable holder			
1	191 971 842	clamp		X	
2	191 971 842 A	cable holder		X	
3	321 971 843	clip		X	
4	331 971 843	bracket		X	
5	357 971 843	cable holder		X	
6	155 971 843 B	bracket		X	
7	191 971 843 B	bracket		X	
8	447 971 843 B	retainer, swivelling	15/16	X	
9	155 971 843 C	bracket		X	
10	--- --- --- .	discontinued / replacement:	N 906 333 01	X	
11	893 971 844	bracket		X	
12	321 971 845	bracket		X	
13	077 971 845 A	cable holder		X	
14	893 971 845 AG	bracket		X	
15	077 971 845 B	cable holder		X	
16		no longer available			
17	811 971 845 D	bracket		X	
18	811 971 845 E	clamp		X	
20	811 971 846	bracket		X	
21	441 971 846 C	bracket		X	
22	803 971 847	cable terminal	5	X	
23		no longer available			
24	895 971 847 A	cable holder		X	
(25)	4B0 971 848	cable holder hole/sheet metal thickness:	6,5 / 0,6-3	X	
25	1H0 971 848 F	cable holder		X	
(25)	1H0 971 848 AF	cable holder hole/sheet metal thickness:	6,5 / 0,8-1,5	1	

Pos	Part Number	Name	Remarks	Qty	Model
(25)	1H0 971 848 AS	clip		1	
26	321 971 847 E	cable holder		X	
27	893 971 847 G	clip		X	
28	321 971 848	clip		X	
29	--- --- --- .	discontinued / replacement:	N 906 661 01	X	
30	--- --- --- .	discontinued / replacement:	N 906 661 01	X	
31		no longer available			
32	441 971 848 A	bracket		X	

Pos	Part Number	Name	Remarks	Qty	Model

Model	Year	MG	SG	Illustration	VIN No.	Update	16:40	18.02.20100	ETKA
EL	90	9	71	977-03		336			

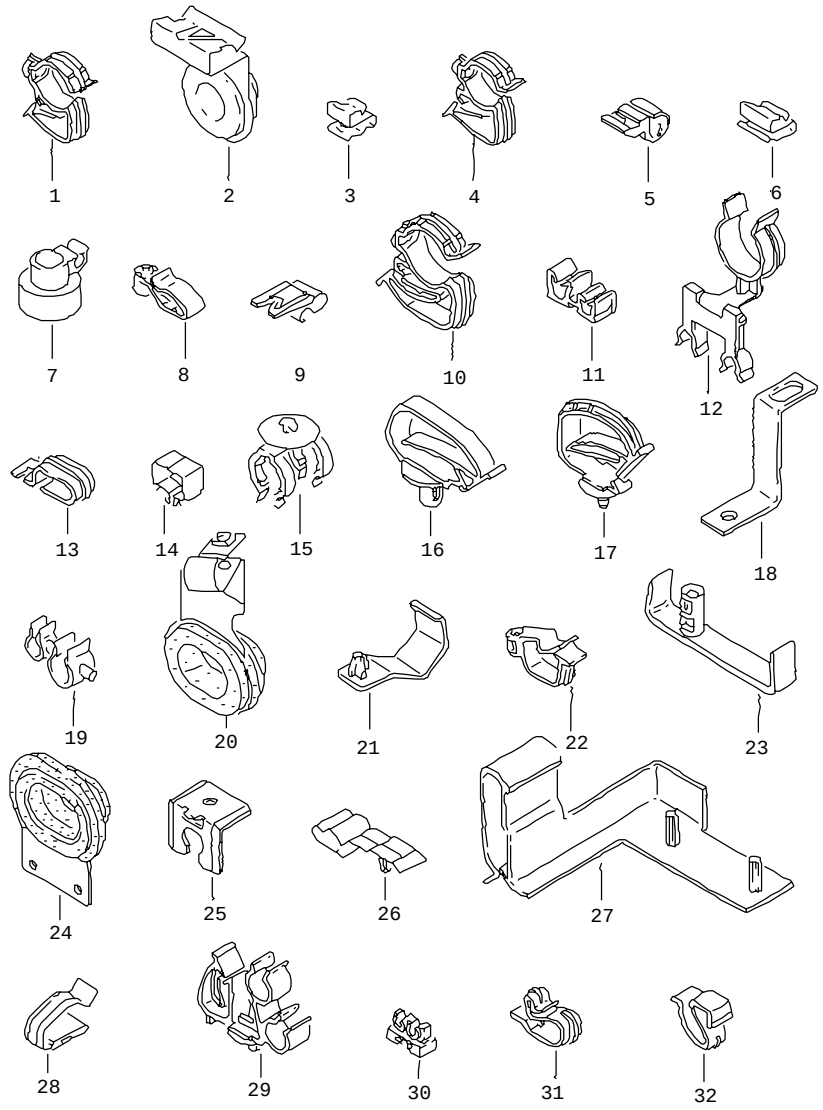

Pos	Part Number	Name	Remarks	Qty	Model
		clip cable holder			
1	535 971 848 A	clip	20	X	
2	443 971 849 B	cable holder		X	
3	861 971 848 A	clip		X	
4	155 971 848 B	clip		X	
5	443 971 848 B	clip	3,6/11,6	X	
6	811 971 848 B	retaining clip		X	
7	893 971 848 B	cable holder		X	
8	191 971 848 C	clip		X	
9	431 971 848 C	clip		X	
10	701 971 848 C	clip		X	
11	811 971 848 C	bracket for hose		X	
12	191 971 848 D	bracket	7,2/7,2/25	X	
13	--- --- --- .	discontinued / replacement:	171 971 898	X	
14	--- --- --- .	discontinued / replacement:	N 902 055 01	X	
15	811 971 848 E	cable holder	6,5X14,5X20,5	X	
16	701 971 848 F	clip		X	
17	--- --- --- .	discontinued / replacement:	N 902 055 02	X	
18	447 971 849	bracket		X	
19	811 971 849	cable holder	8/9	X	
(19)	1H0 972 907	retainer, swivelling	4,3/6	X	
20	447 971 849 A	bracket		X	
21	893 971 849 A	cable holder		X	
22	893 971 849 C	cable holder		X	
24	443 971 849 E	bracket	16X30	X	
25	331 971 852 B	bracket	23X42	X	
26	357 971 854	cable holder		X	
27	171 971 862	cable holder		X	

Pos	Part Number	Name	Remarks	Qty	Model
28	321 971 897	clip		X	
29	4A0 971 897	holder		X	
30	531 971 897	clip		X	
31	867 971 897	clip		X	
32	191 971 897 A	clip		X	

Pos	Part Number	Name	Remarks	Qty	Model

Model	Year	MG	SG	Illustration	VIN No.	Update	16:40	18.02.20100	ETKA
EL	90	9	71	977-04		336			

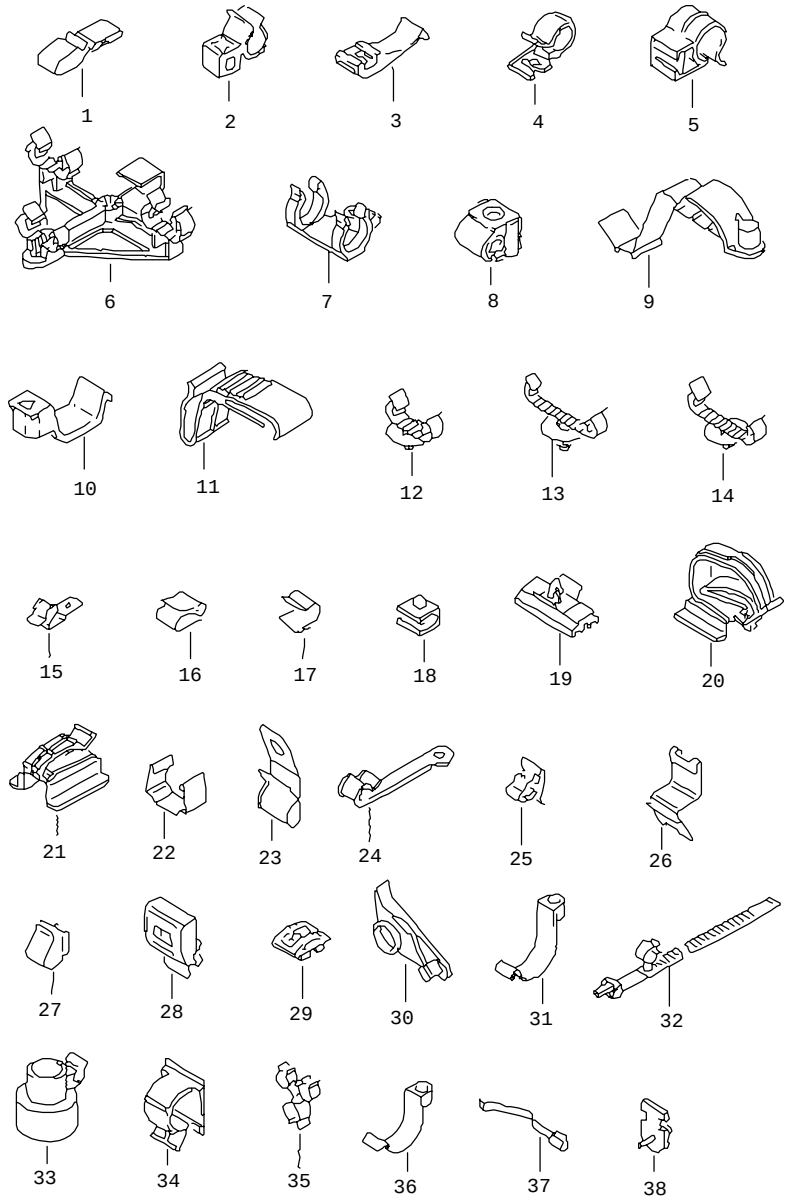

Pos	Part Number	Name	Remarks	Qty	Model
		clip cable holder			
1	357 971 897 A	cable holder		X	
2	--- --- --- .	discontinued / replacement:	N 906 333 01	X	
3	161 971 898	clip	7X35MM	X	
4	171 971 898	clip		X	
5	--- --- ---	no longer available	12MM	X	
6	357 971 898	bracket	3 point	X	
7	893 971 898	bracket	13MM	X	
8	321 971 898 A	clip	6	X	
9	535 971 898 A	cable holder		X	
10	191 971 898 C	clip	4,8	X	
11	701 971 898 C	cable holder		X	
12	1H0 971 899 B	bracket			
13	357 971 899 C	bracket		X	
14	701 971 899 G	bracket		X	
15	867 971 930 A	bracket		X	
16	311 971 939	cable terminal		X	
17	111 971 939 A	cable terminal		X	
19	443 972 081	clip		X	
20	357 972 851	cable holder		X	
21	357 972 851 A	cable holder		X	
22	701 971 615 A	clamp		X	
23	4A0 971 848 G	cable terminal		X	
24	050 971 845 A	cable holder		X	
25	701 971 842 C	cable terminal		X	
26	357 972 793 F	clamp		X	
27	893 971 847 F	cable terminal		X	
28	1H0 971 842	cable holder		X	

Pos	Part Number	Name	Remarks	Qty	Model
29	4A0 972 621	clip		X	
30	1H5 971 847	clip		X	
31	358 971 898	bracket		X	
32	443 957 818 C	cable binder	7X273-8	X	
33	8A0 971 848	cable holder		X	
34	251 971 739 B	clip		X	
35	701 905 787	bracket		X	
36	357 971 898 D	bracket		X	
37	357 971 842 B	retaining clip		X	
38	281 971 848	holder for loom		X	

Pos	Part Number	Name	Remarks	Qty	Model

Model	Year	MG	SG	Illustration	VIN No.	Update	16:40	18.02.20100	ETKA
EL	90	9	71	977-05		336			

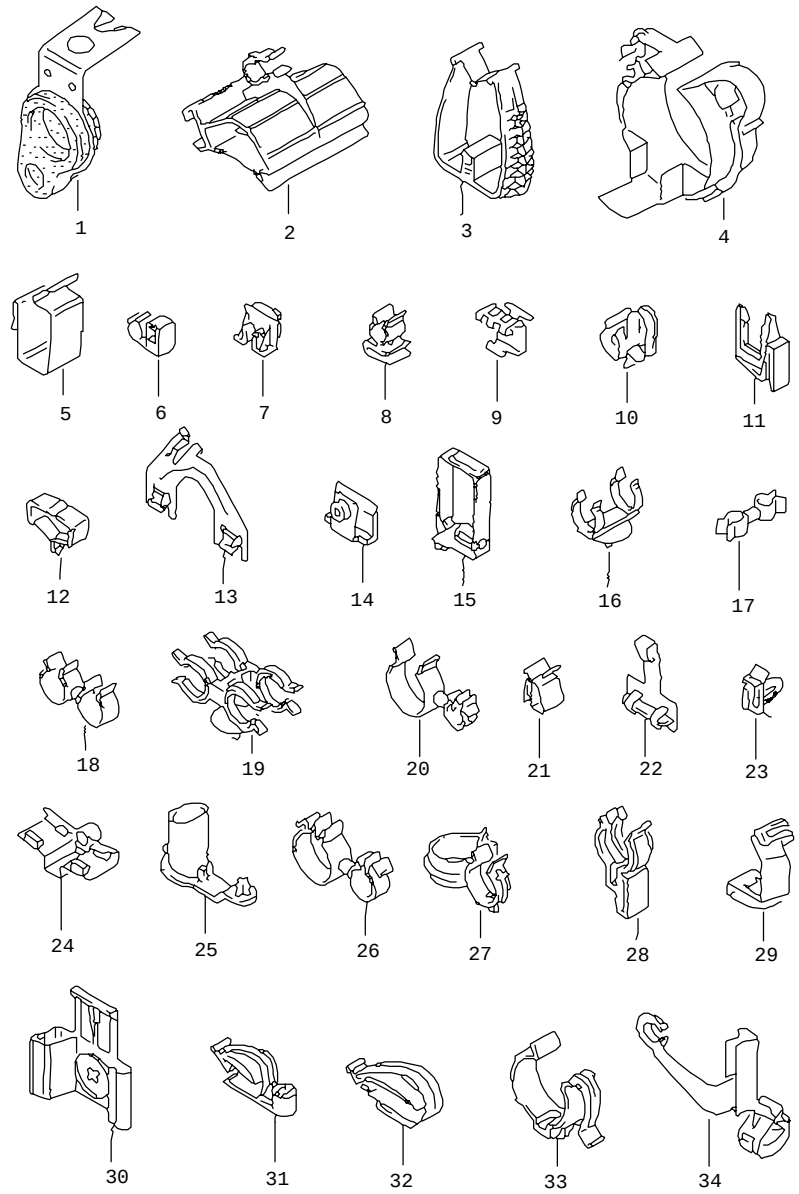

Pos	Part Number	Name	Remarks	Qty	Model
		clip cable holder			
1	893 971 848 A	cable holder		X	
2	1H0 971 615 D	clip		X	
3	701 971 848 H	clip		X	
4	701 971 843 A	cable holder		X	
5	701 971 842	cable terminal	18/30	X	
7	1H6 971 848 A	bracket		X	
8	1H0 971 787	bracket		X	
9	084 971 848	bracket		X	
10	701 971 898	cable holder		X	
11	357 971 843 C	clip		X	
12	--- --- --- .	discontinued / replacement:	N 906 661 01	X	
13	1H2 971 842	bracket		X	
14	4A0 971 739	clip		X	
15	1H0 971 848 M	clip	23X46	X	
(15)	1H2 971 848	clip	20X34	X	
16	811 971 848 E	cable holder	6,5X14,5X20,5	X	
17	531 957 787	retainer, swivelling	7/7MM	X	
18	191 955 980	bracket for hose		X	
19	4A0 971 848 F	cable holder		X	
(20)	701 971 787 T	retainer, swivelling		X	
21	893 971 847	clip		X	
22	701 971 897	clip		X	
23	8A0 972 081	bracket		X	
24	1H0 971 845 E	clip		X	
25	8A0 971 824 B	cable holder		X	
26	701 971 848 D	retainer, swivelling	14/25	X	
27	701 971 848 G	clip		X	

Pos	Part Number	Name	Remarks	Qty	Model
28	1H0 971 847	clip		X	
(29)	358 971 842	cable holder connecting piece lambda probe		1	
30	1H0 971 899	cable holder		X	
31		see illustration:	979-10		
32	1H0 971 897	clip		X	
33	021 971 848	cable holder	34.8	X	
34	--- --- --- .	discontinued / replacement:	1H0 971 615 R	X	

Pos	Part Number	Name	Remarks	Qty	Model

Model	Year	MG	SG	Illustration	VIN No.	Update	16:40	18.02.20100	ETKA
EL	90	9	71	977-06		336			

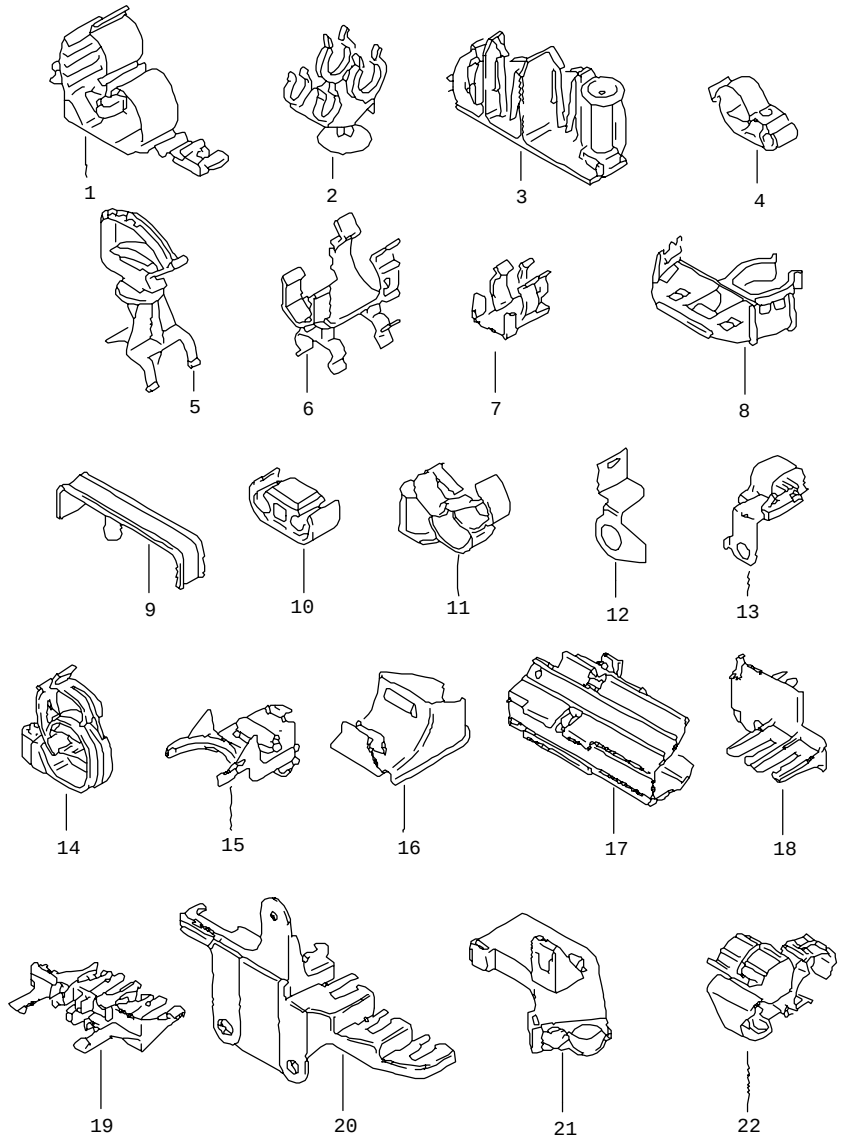

Pos	Part Number	Name	Remarks	Qty	Model
		clip cable holder			
1	1H0 971 003 A	bracket		1	
2	8A0 971 898	bracket		X	
3	1H0 971 731	cable holder		X	
4	4A0 971 848 E	clip		X	
5	1H0 971 816 A	cable holder		X	
6	701 971 899 K	bracket		X	
7	1H0 971 845 B	bracket		X	
8	701 971 899 C	bracket		X	
10	8A0 971 847 C	clip		X	
11		see illustration:	979-10		
12	J82 715 891 08	bracket		X	
13	J82 711 950 24	cable holder		X	
14	1H0 972 847	clip		X	
15	6N0 971 501 A	bracket		1	
16	3A0 971 615	cable holder		1	
17	1H0 971 615 P	clip		1	
18	1HM 971 845	bracket		1	
19	1H9 971 845 A	bracket		1	
20	8D0 971 845 AN	bracket		1	
21	535 971 848 D	cable holder		1	
22	701 971 848 P	bracket	22/22/24,5	1	

Model	Year	MG	SG	Illustration	VIN No.	Update	16:40	18.02.20100	ETKA
EL	90	9	71	977-07		336			

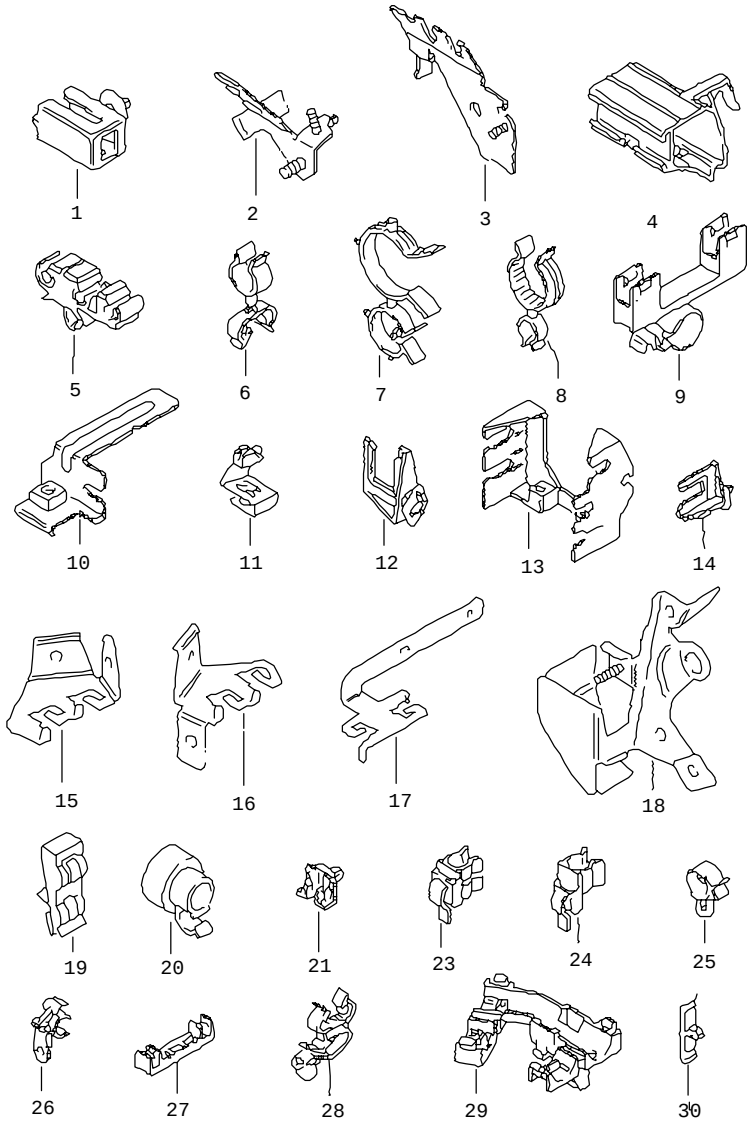

Pos	Part Number	Name	Remarks	Qty	Model
		clip cable holder			
1	701 957 845 A	retainer, swivelling with cap for seal		X	
2	535 971 501	bracket		X	
3	1H0 971 501 A	bracket		X	
4	1H0 971 615 J	clip		X	
5	701 971 767	holder		X	
6	702 971 787	retainer, swivelling	16/13,4/19,4	X	
7	1H0 971 787 A	retainer, swivelling	24/38	X	
(8)	701 971 787 T	retainer, swivelling	14/29	X	
9	701 971 787 S	retainer, swivelling		X	
10	1H0 971 812	bracket clip	for: 1H0 971 615 D	X	
11	358 971 842	cable holder		X	
12	1H0 971 843 H	bracket		X	
13	867 971 844	bracket		X	
14	1H5 971 845 A	bracket		X	
15	4A2 971 845 D	bracket		X	
16	4A0 971 845 F	bracket		X	
17	4A2 971 845 J	bracket		X	
18	893 971 845 S	bracket		X	
19	8A0 971 847 D	bracket		X	
20	281 971 847 E	cable holder		X	
21	1H6 971 848 A	bracket		X	
23	1H0 971 848 AH	clip		X	
24	1H0 971 848 AM	clip		X	
25	--- --- --- .	discontinued / replacement:	N 204 288 01	X	
26	4A0 971 848 L	cable holder		X	
27	701 971 848 L	clip		X	

Pos	Part Number	Name	Remarks	Qty	Model
28	701 971 848 M	clip		X	
29	1H0 971 848 P	cable holder		X	
30	1H0 971 848 Q	cable holder		X	

Pos	Part Number	Name	Remarks	Qty	Model

Model	Year	MG	SG	Illustration	VIN No.	Update	16:41	18.02.20100	ETKA
EL	90	9	71	977-08		336			

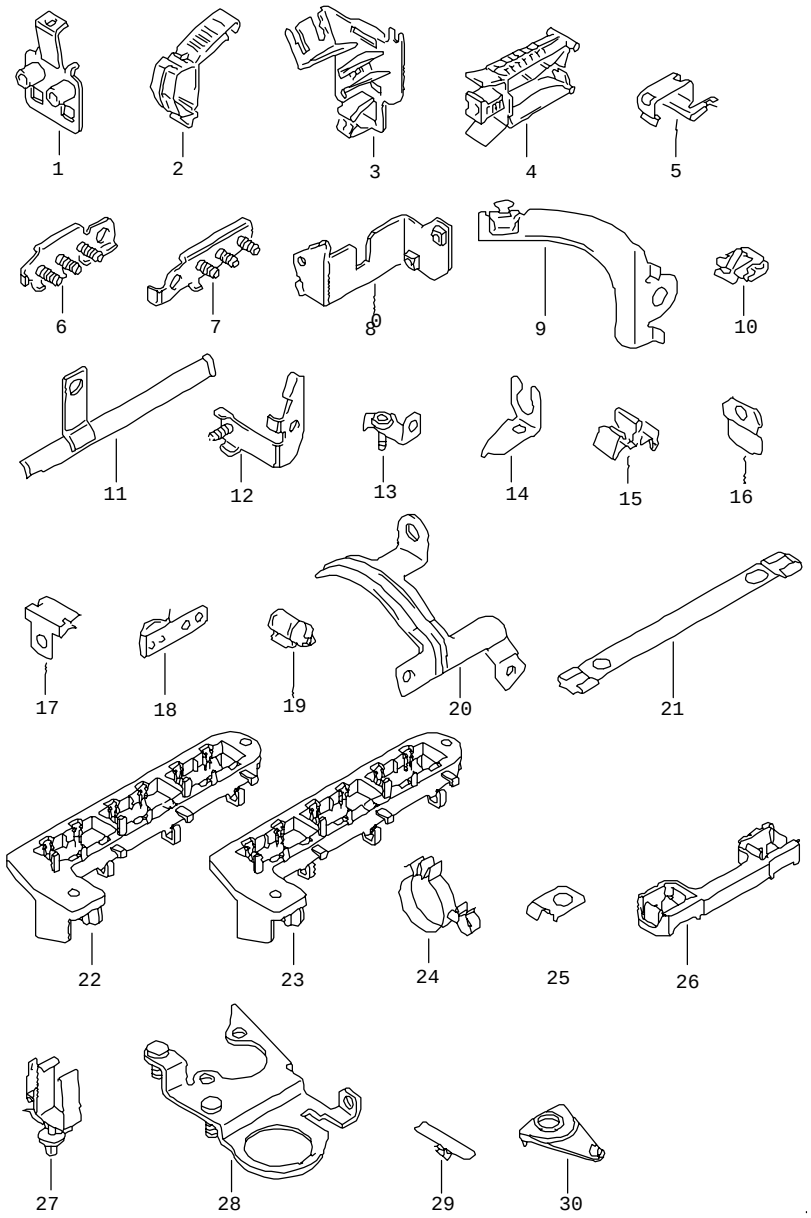

Pos	Part Number	Name	Remarks	Qty	Model
		clip cable holder			
1	1H0 971 852	bracket		X	
2	701 971 898 D	cable holder		X	
3	357 971 899 G	bracket		X	
4	701 971 848 E	clip loom, rear		1	
5	8A0 953 269	retaining clip connecting piece terminal pin housing horn	 5 pin	1	
6	021 971 501	bracket ground strap	for:	1	
7	037 971 501 B	junction box		1	
8	3A2 971 501	bracket connecting piece flat contact housing	rhd 3A0 973 713	1	
9	6N0 971 501 A	bracket		1	
(9)	6N0 971 501 B	cable holder		1	
10	1H0 971 842 F	cable holder wiring lambda probe heat protection plate		1	
(10)	1H0 971 842 C	clip wiring lambda probe heat protection plate		4	
11	077 971 845 D	cable holder	left	1	
12	8D0 971 845 H	holder for loom connecting piece starter		1	
12	8D0 971 845 H	holder for loom connecting piece starter		1	
13	4A0 971 845 AD	bracket		1	
14	4A0 971 846 A	bracket wheel bearing housing	 right	1	
15	4A9 971 847 A	clamp		8	

Pos	Part Number	Name	Remarks	Qty	Model
16	8D0 971 847 B	cable holder		1	
17	8D0 971 847 G	cable holder loom for lambda probe		X	
18	4A0 971 847 H	cable terminal		1	
19	037 971 848 A	clamp		1	
(19)	4A0 971 847 B	clamp	10MM	X	
20	1H0 971 858 F	bracket wiring loom for battery -		1	
21	4D0 971 843 F	bracket		1	
22	8D1 937 545 A	bracket for connector housing	6-pin	1	
23	8D1 937 545 B	bracket for connector housing	6-pin	1	
24	701 971 787 Q	bracket		1	
25	4B0 971 847 D	cable holder		1	
26	06A 971 902	cable holder		1	
27	3B0 971 003	bracket connecting piece flat connector housing flat connector housing	 893 971 983 3B0 972 712	1	
28	037 971 501 H	bracket connecting piece flat connector housing	 28 pin	1	
28	037 971 501 H	bracket connecting piece flat connector housing	 28 pin	1	
29	6K0 971 848 A	clip		X	
30	6K5 971 848	clip		X	

Pos	Part Number	Name	Remarks	Qty	Model

Model	Year	MG	SG	Illustration	VIN No.	Update	16:41	18.02.20100	ETKA
EL	90	9	71	977-09		336			

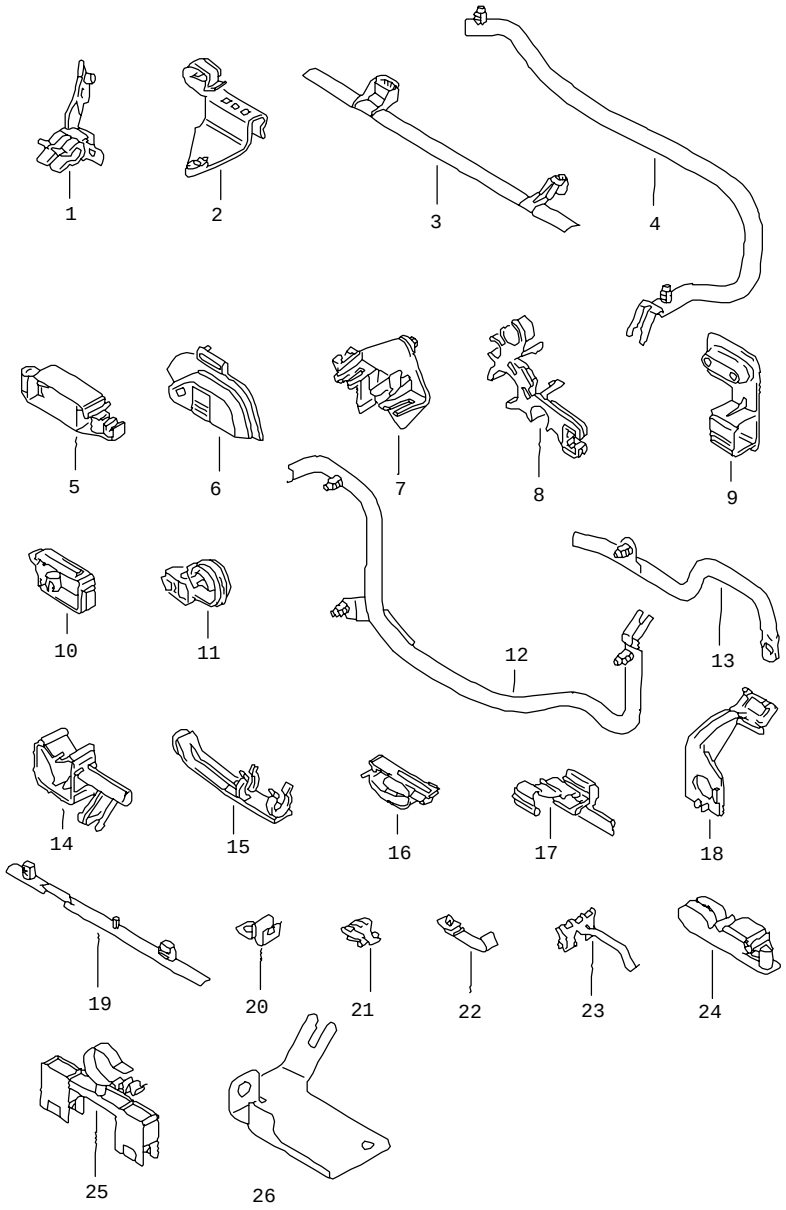

Pos	Part Number	Name	Remarks	Qty	Model
		clip cable holder			
1	3A0 971 611 B	cable holder		X	
2	1H0 971 615 R	cable holder		X	
3	1H0 971 615 S	cable holder		X	
4	6N0 971 615 AD	cable holder		X	
(4)	6N0 971 615 J	cable holder		X	
5	6N0 971 731	cable holder		X	
6	1H0 971 824 B	bracket		X	
7	3A0 971 845 B	bracket		X	
8	4B0 971 845	bracket		X	
9	1H0 971 848 AP	cable holder		X	
10	1H2 971 848	clip	20X34	X	
11	3A0 971 848 B	cable holder		X	
12	6N0 971 848 E	cable holder		X	
13	6N0 971 848 F	cable holder		X	
14	701 971 848 R	cable holder		X	
15	1H0 971 852 B	bracket		X	
16	1HM 971 897 B	clip	18,5X32	X	
17	3A0 971 897 C	bracket		X	
18	3A5 972 595	bracket		X	
19	030 972 822	cable holder		X	
20	8D0 971 847 J	cable holder loom for lambda probe		X	
20	8D0 971 847 J	cable holder loom for lambda probe		X	
21	1H0 971 939	retaining clip		15	
22	8D9 971 848 A	cable holder flap, rear		3	
23	1H0 971 848 D	clip		1	

Pos	Part Number	Name	Remarks	Qty	Model
24	6X0 971 848 M	cable holder		X	
25	7D0 971 787 B	cable holder		1	
26	7D0 971 843 B	cable holder		1	

Pos	Part Number	Name	Remarks	Qty	Model

Model	Year	MG	SG	Illustration	VIN No.	Update	16:41	18.02.20100	ETKA
EL	90	9	71	977-10		336			

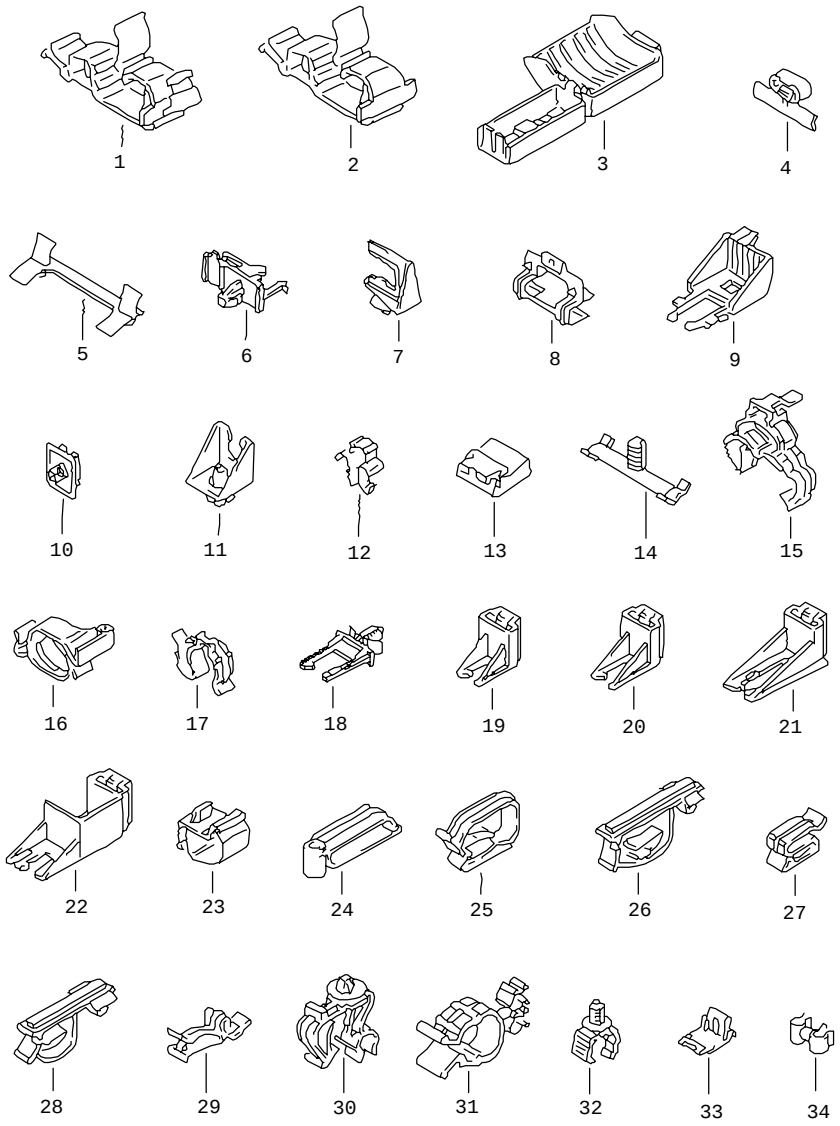

Pos	Part Number	Name	Remarks	Qty	Model
		clip holder			
1	6N0 971 005	cable holder		X	
2	6N0 971 005 A	cable holder		X	
3	6N0 971 006	cable holder		X	
4	3A0 971 615 D	clip	23X46	X	
5	6N0 971 731 A	cable holder		X	
6	701 971 806	cable holder		X	
7	1H0 971 845	bracket		X	
8	1H0 971 845 G	bracket		X	
9	3A0 971 845 D	bracket		X	
10	8A0 971 845 AF	bracket		X	
11	8D0 971 845 C	holder for loom speed sensor		X	
12	1H0 971 847 A	clip	23X46	X	
13	8D0 971 847 A	cable terminal		X	
14	8D0 971 847 C	cable holder	8MM	X	
15	1H0 971 848 AN	cable holder		X	
16	1H1 971 848	clip	20X28	X	
17	3A0 971 848 A	cable holder	17	X	
18	8A0 971 848 G	clip		X	
19	8D0 971 848	cable holder		X	
20	8D0 971 848 A	cable holder		X	
21	8D0 971 848 B	cable holder		X	
21	8D0 971 848 B	cable holder		X	
22	8D0 971 848 F	cable holder		X	
23	8D0 971 848 R	cable holder		X	
24	8D0 971 848 M	bracket	18X50	X	
25	1HM 971 897 D	clip		X	

Pos	Part Number	Name	Remarks	Qty	Model
26	1HM 971 897 E	clip		X	
27	191 971 897 B	clip		X	
28	3A0 971 897	cable holder		X	
29	3A0 971 897 B	clip	23X46	X	
30	8D0 971 897	cable holder		X	
31	028 972 335	clip	6X6X28	X	
32	--- --- --- .	discontinued / replacement:	N 907 726 01	X	
(32)	N 907 726 01	cable binder - corrugated pipe hole/sheet metal thickness:	5X200 6,5 / 0,6-2,0	X	
33	1H0 972 891	clamp		X	
34	1H0 972 907	retainer, swivelling	4,3/6	X	

Pos	Part Number	Name	Remarks	Qty	Model

Model	Year	MG	SG	Illustration	VIN No.	Update	16:41	18.02.20100	ETKA
EL	90	9	71	977-11		336			

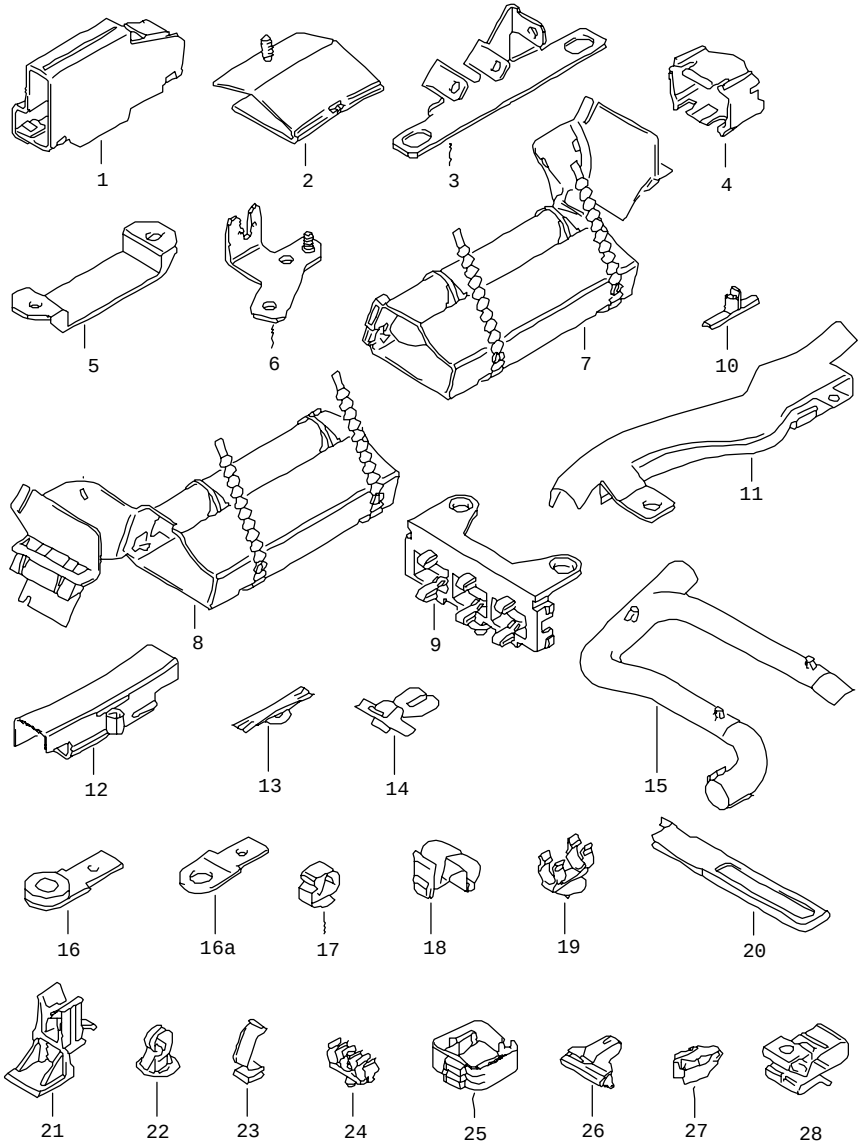

Pos	Part Number	Name	Remarks	Qty	Model
		clip cable holder			
1	4B0 971 824 C	wiring conduit steering column	lhd	1	
2	4B0 971 824 D	wiring conduit steering column	lhd	1	
3	4D0 971 845 AH	holder for loom		1	
4	4D0 971 845 E	holder for loom		1	
5	4D0 971 845 G	holder for loom bracket for pedal cluster		1	
6	701 971 501 E	holder for loom		1	
7	1J1 971 341 A	holder for loom	lhd	1	
8	1J2 971 341 A	holder for loom	rhd	1	
9	6X0 937 545	flat contact housing mounting		2	
10	032 972 822	cable holder		1	
11	1J0 971 446	cable holder		1	
12	1J0 971 446 A	cable holder		1	
13	1J0 971 843 A	cable holder		1	
14	1J4 971 005	cable holder floor assembly		1	
15	1J6 971 615 B	cable holder		1	
16	2D0 971 787 E	cable holder		X	
16A	2D0 971 789 D	cable holder		X	
17	2D0 971 848 A	cable holder		1	
18	3B0 971 848 D	cable holder		X	
19	4B0 971 848 A	cable holder hole/sheet metal thickness:	8MM/0,8-3,5MM	X	
20	6K0 971 615 A	cable holder		1	
21	7M0 971 005 E	cable holder		1	
22	7M0 971 843 H	cable holder		X	
23	8L0 971 847	cable terminal		1	

Pos	Part Number	Name	Remarks	Qty	Model
24	8L0 972 847	cable terminal		1	
25	1H0 971 848 AD	clip		1	
26	6K5 971 897	clip		X	
27	6N0 971 848	clip		X	
28	6N0 971 897 A	clip		1	

Pos	Part Number	Name	Remarks	Qty	Model

Model	Year	MG	SG	Illustration	VIN No.	Update	16:42	18.02.20100	ETKA
EL	90	9	71	977-12		336			

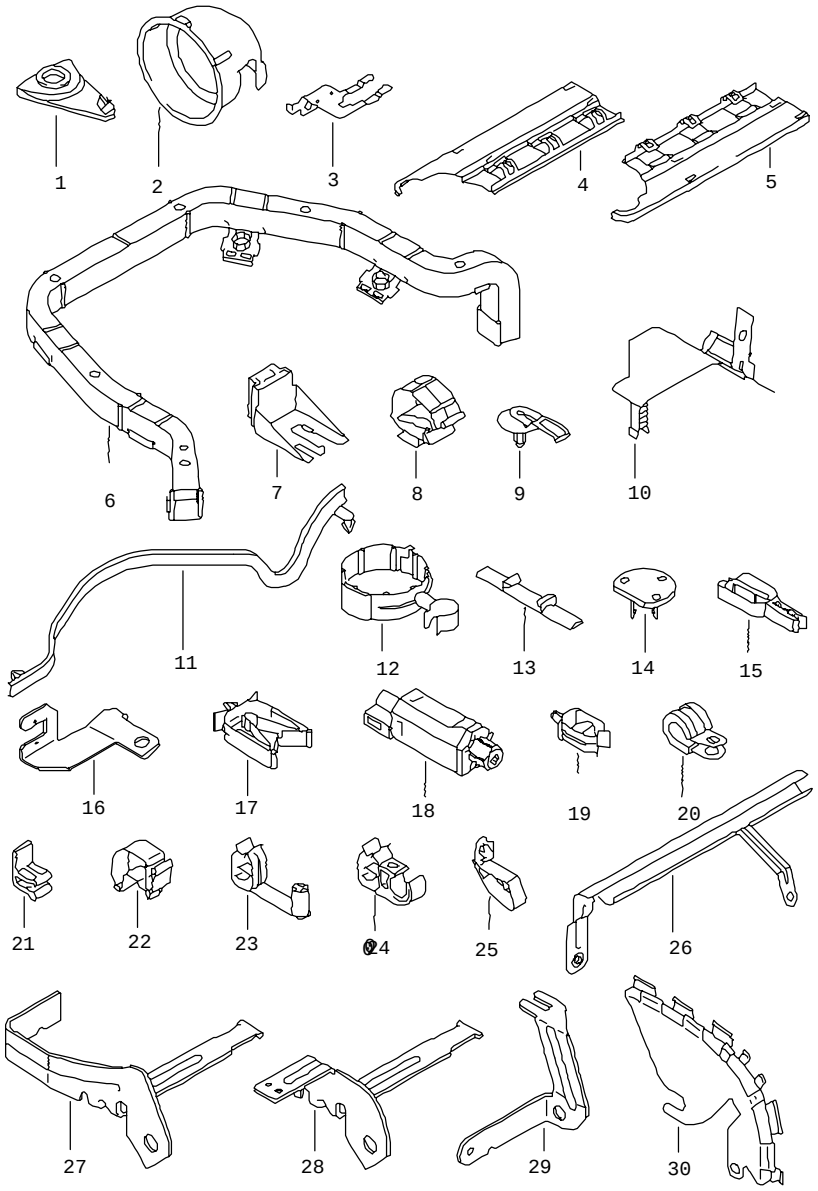

Pos	Part Number	Name	Remarks	Qty	Model
		clip cable holder			
1	6K5 971 847	cable holder		1	
2	6K4 971 615	cable holder		1	
3	6K0 971 741	cable holder		1	
4	6K5 971 897 A	cable holder		1	
5	6K5 971 898	cable holder		1	
6	6N0 971 615 AM	cable holder		1	
7	8D0 971 848 G	cable holder		1	
8	6N0 971 848 K	cable holder		X	
9	6N0 971 898	cable holder		X	
10	6X0 971 615 N	cable holder		1	
11	8L0 971 824	cable holder		1	
12	6X0 971 842	cable holder		1	
13	6X0 971 848	cable holder		X	
14	6X0 971 848 J	cable holder		1	
15	7M0 971 844 M	cable holder		1	
16	701 971 787 AD	cable holder		1	
17	701 971 848 AB	cable holder		1	
18	701 971 848 AC	cable holder		1	
19	8D0 971 847	cable holder hole/sheet metal thickness:	 6,8MM	1	
20	8D0 971 849 F	cable holder		X	
21	6N0 971 848 G	cable holder		1	
21	6N0 971 848 G	cable holder		1	
22	8D0 971 848 R	cable holder		2	
24	8D0 971 897 B	cable holder		1	
25	8L0 971 848 B	cable holder		2	
26	1H0 972 823 A	bracket		1	

Pos	Part Number	Name	Remarks	Qty	Model
27	7M0 971 005 F	bracket		1	
28	7M0 971 005 G	bracket		1	
29	7M0 971 502 G	bracket		1	
30	1J0 971 615 K	wiring conduit		1	

Pos	Part Number	Name	Remarks	Qty	Model

Model	Year	MG	SG	Illustration	VIN No.	Update	16:42	18.02.20100	ETKA
EL	90	9	71	977-13		336			

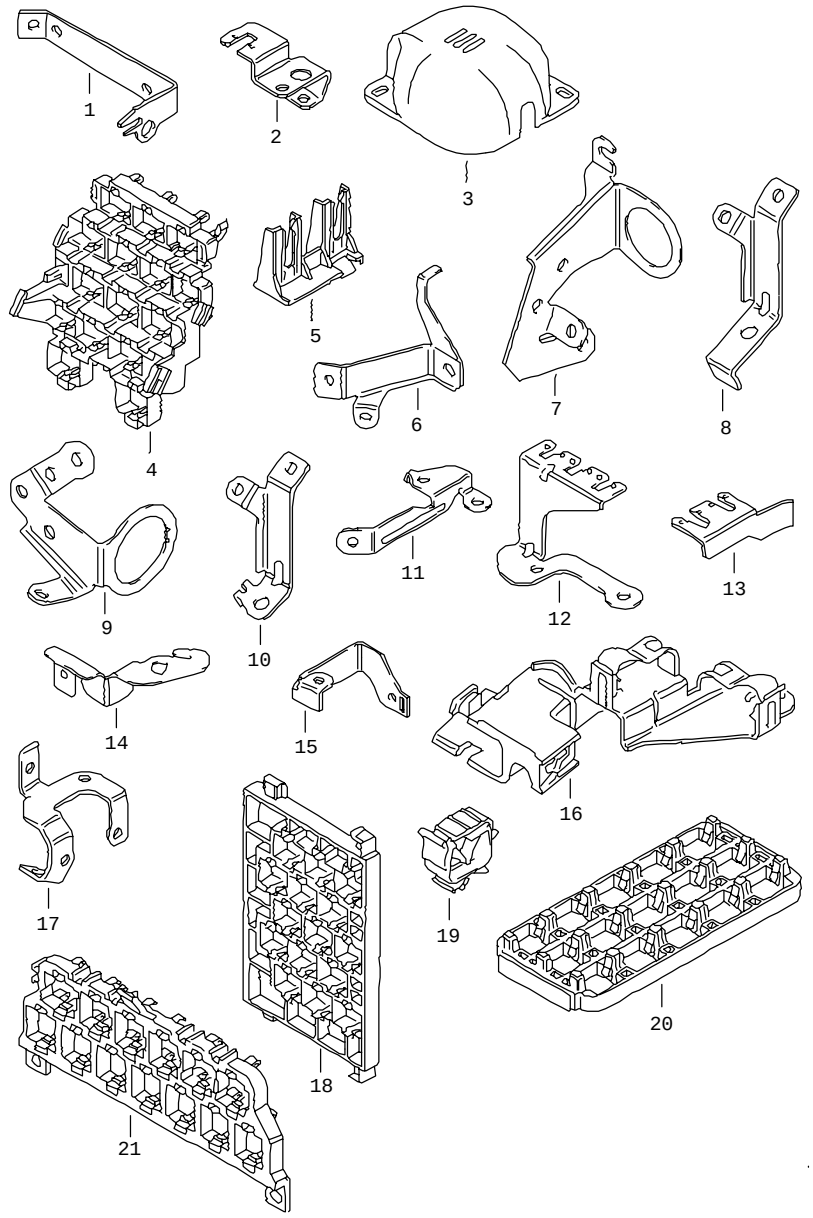

Pos	Part Number	Name	Remarks	Qty	Model
		clip cable holder			
2	021 971 824 F	bracket for connector housing connecting piece flat contact housing injection unit		1	
3	1J0 971 830	bracket for connector housing		1	
4	8D0 937 545 G	bracket for connector housing a pillar	17 point	1	
5	701 971 899 L	clip connecting piece flat contact housing lambda probe		1	
6	030 971 502 C	bracket wiring harness for alternator		1	
7	030 971 502 D	bracket coupling piece loom for engine compartment		1	
8	030 971 502 E	bracket wiring harness for alternator		1	
9	030 971 502 F	bracket coupling piece loom for engine compartment		1	
10	030 971 502 H	bracket wiring harness for alternator		1	
11	030 971 502 M	bracket		1	
12	06A 971 502	bracket		1	
13	06A 971 502 E	bracket		1	
14	06A 971 502 F	bracket		1	
14	06A 971 502 F	bracket		1	
15	06A 971 858	bracket		1	
16	6K0 971 615	cable holder		1	
17	021 971 502 D	bracket connecting piece wiring loom for engine		1	

Pos	Part Number	Name	Remarks	Qty	Model
18	1J1 941 379	flat contact housing mounting		1	
19	7D0 971 849	cable holder		X	
20	4D0 937 503	bracket for connector housing	15 point	1	
21	8D0 937 503 E	bracket for connector housing	13 point	1	

Pos	Part Number	Name	Remarks	Qty	Model

Model	Year	MG	SG	Illustration	VIN No.	Update	16:42	18.02.20100	ETKA
EL	90	9	71	977-14		336			

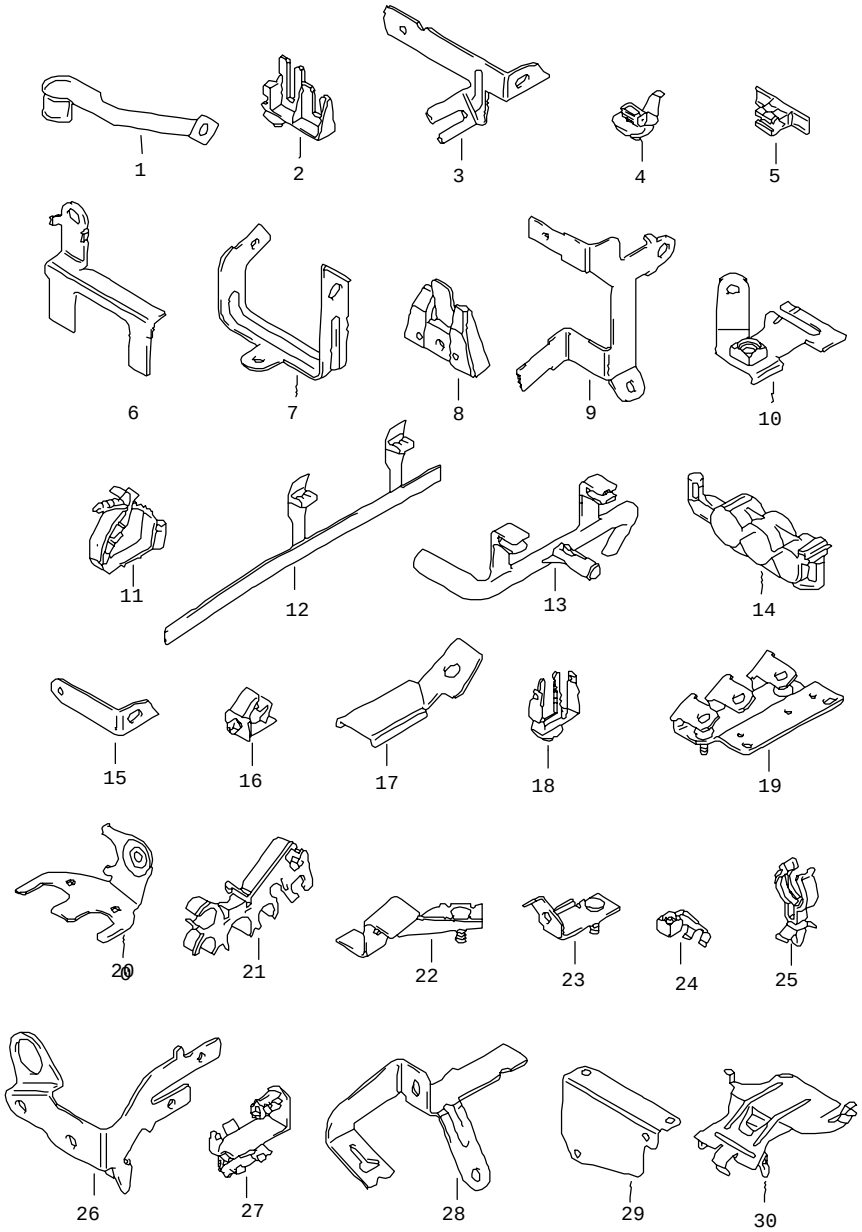

Pos	Part Number	Name	Remarks	Qty	Model
		cable holder clip			
1	1H0 907 324 B	bracket		1	
2	1H0 971 845 K	bracket		1	
3	1H0 971 858 E	bracket		1	
4	1J0 971 003	bracket		X	
5	1J0 971 003 A	bracket roof wiring harness		X	
6	1J0 971 502 B	bracket loom for automatic gearbox		1	
7	1J0 971 502 C	bracket loom for automatic gearbox		1	
8	1J0 971 457	bracket altitude sensor		1	
9	1J0 971 502 E	bracket loom for automatic gearbox		1	
10	1J0 971 812 C	bracket		1	
11	1J0 971 843	bracket water box		X	
12	1J0 971 615 S	wiring conduit		1	
13	1J0 971 848	bracket side member	right	1	
14	1J0 971 849	bracket water box		X	
15	1J0 971 858 A	bracket		1	
16	1J6 971 848	bracket		X	
16	1J6 971 848	bracket		X	
17	2D0 937 539 S	bracket		1	
18	3B0 971 003 B	bracket		1	
19	4A0 971 845 AK	bracket water box		1	

Pos	Part Number	Name	Remarks	Qty	Model
20	4A0 971 845 AL	bracket loom for transmission		1	
21	4B0 971 845	bracket		1	
22	4D0 971 843 D	bracket loom for motronic		1	
23	4D0 971 843 E	bracket loom for motronic		1	
24	6K0 971 804	bracket		1	
25	6K0 971 847 A	bracket		1	
26	6N0 971 502	bracket adapter wiring loom for automatic gearbox		1	
27	6N0 971 845 C	bracket for lambda probe		1	
28	6N0 971 858	bracket		1	
29	7D0 937 503	bracket fuse box		1	
30	7D0 937 497	bracket fuse box abs unit		1	

Pos	Part Number	Name	Remarks	Qty	Model

Model	Year	MG	SG	Illustration	VIN No.	Update	16:42	18.02.20100	ETKA
EL	90	9	71	977-15		336			

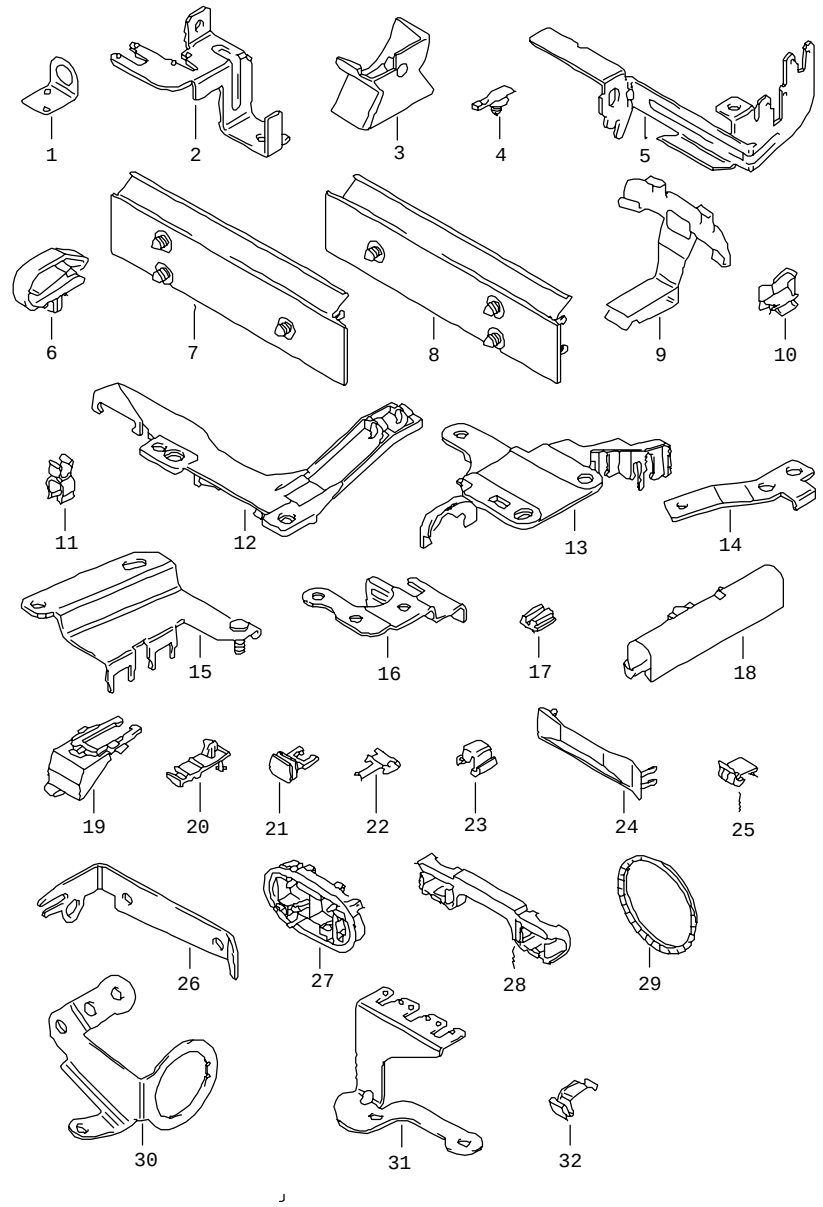

Pos	Part Number	Name	Remarks	Qty	Model
		cable holder clip			
1	7M0 971 503	bracket connecting piece outer temperature sensor		1	
2	7M0 971 787 D	bracket anti-knock sensor		1	
3	7M0 971 820 B	bracket wiring loom for battery +		1	
4	7M0 971 845 A	bracket		1	
5	7M0 971 845 G	bracket anti-knock sensor		1	
6	7M0 971 848 H	bracket		X	
7	7M1 971 845 B	bracket		1	
8	7M2 971 845 B	bracket		1	
9	701 971 898 K	bracket connecting piece brake servo		1	
10	8A0 971 847 F	bracket		1	
11	8D0 971 532	bracket		1	
12	8D0 971 845 AC	bracket connecting piece water box	 right	1	
13	8D0 971 845 AN	bracket water box	 left	1	
14	8D0 971 845 J	bracket		1	
15	8D0 971 845 N	bracket connecting piece loom for automatic		1	
16	8D0 971 845 T	bracket flat contact housing loom injector		1	
17	8D0 972 081	bracket fuse holder		1	
18	1J2 971 843 A	holder		1	

Pos	Part Number	Name	Remarks	Qty	Model
19	1H0 971 845 C	bracket flat contact housing	 1J0 973 835	1	
20	7D1 971 806	cable holder		1	
21	1J0 971 845 A	bracket connecting piece wiring conduit	16X26	X	
22	7M0 971 842 A	cable holder		1	
23	4B0 971 828	cable connector		1	
24	4D0 941 819	cover junction box		1	
25	030 971 842 B	clip	20,5X15	X	
27	8D0 937 545 E	bracket for connector housing pillar b		X	
28	06A 971 902	cable holder		1	
29	8D0 971 882	protective ring a pillar	59,5	X	
30	030 971 502 F	bracket coupling piece loom for engine compartment		1	
31	06A 971 502	bracket		1	
32	8L0 971 847	cable terminal		1	

Pos	Part Number	Name	Remarks	Qty	Model

Pos	Part Number	Name	Remarks	Qty	Model
		cable holder clip			
-	8D0 937 083	retaining clip bracket for connector housing	17 point	1	
-	1J0 971 615 L	wiring conduit		1	
-	1J0 971 830 F	bracket for connector housing for vehicles with 2 electric fans		1	
-	1J0 971 842 C	cable holder		1	
-	4B9 971 848 A	cable holder hole/sheet metal thickness:	6,5MM/0,6-3MM	X	
-	8A0 971 848 C	clip		2	
-	4B0 971 847 C	cable holder for sheet metal thickness:	19,8/13MM 8MM	1	
-	4B0 971 848 C	cable holder hole/sheet metal thickness:	8MM/0,8-3MM	X	
-	4B0 971 848 E	cable holder radio		1	
-	1H0 971 939 C	clip electric fan		1	
-	1J0 971 939 C	clip electric fan		1	
-	4B1 972 081	mounting for relay plate		1	

Model	Year	MG	SG	Illustration	VIN No.	Update	16:42	18.02.20100	ETKA
EL	90	9	71	977-17		336			

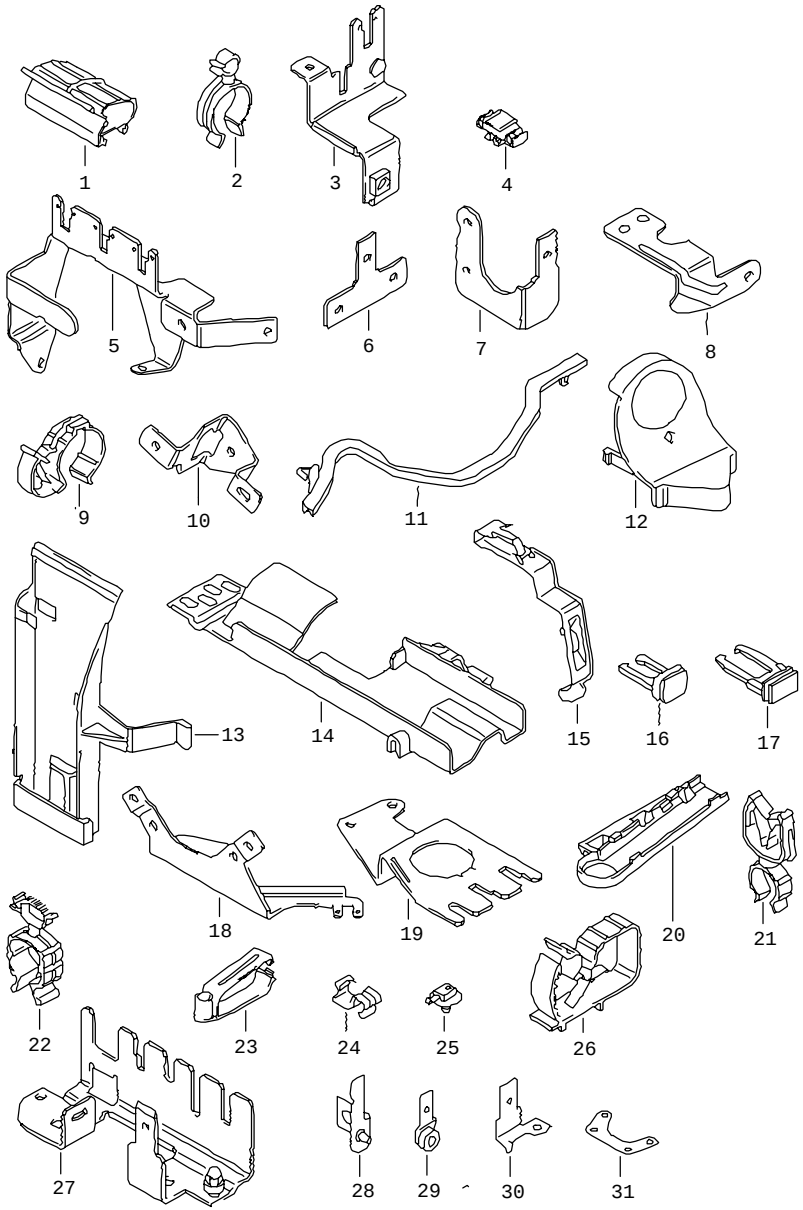

Pos	Part Number	Name	Remarks	Qty	Model
		cable holder holder			
1	1H0 971 615 AB	cable holder		1	
2	281 957 787 C	cable holder	12/29	1	
3	7D0 971 787	bracket for connector housing		1	
4	1J0 937 510	adapter flat contact housing		X	
5	06A 971 502 M	bracket connecting piece anti-knock sensor		1	
6	06A 971 502 N	bracket connecting piece wiring loom for engine		1	
8	071 971 502 B	bracket wiring loom for engine area: injector		1	
9	021 971 848 A	cable holder connecting piece cooling pipe	34,8	1	
10	7M0 951 185 K	bracket SDS-HORN		1	
11	8L0 971 824	cable holder		1	
12	1E2 971 615	cable holder	rhd	1	
13	6N2 971 615 A	cable holder	rhd	1	
14	6N2 971 615 C	cable holder	rhd	1	
15	7D0 971 842	cable holder	rhd	X	
16	1J0 971 845 B	bracket	18X31,5	X	
17	1J0 971 845 C	bracket	22X50	X	
17	1J0 971 845 C	bracket	22X50	X	
18	032 971 502 A	bracket		1	
19	037 971 502 B	bracket		1	
20	1H5 971 897 A	bracket		1	
21	7M0 971 843 G	bracket		1	

Pos	Part Number	Name	Remarks	Qty	Model
22	028 972 335 A	clip		1	
23	8D0 971 849 G	clip floor assembly		X	
24	030 971 842 A	clip	25,5X15	X	
25	N 906 851 01	bracket for connector housing	A6,5	1	
26	7D0 971 006	cable holder mounting for headlamps		X	
27	2D0 971 787 F	cable holder		1	
28	2D0 971 787 D	cable holder		1	
29	2D0 971 789 D	cable holder		X	
30	2D0 971 789 E	cable holder		1	
31	2D0 971 789 J	cable holder intake manifold		1	

Pos	Part Number	Name	Remarks	Qty	Model

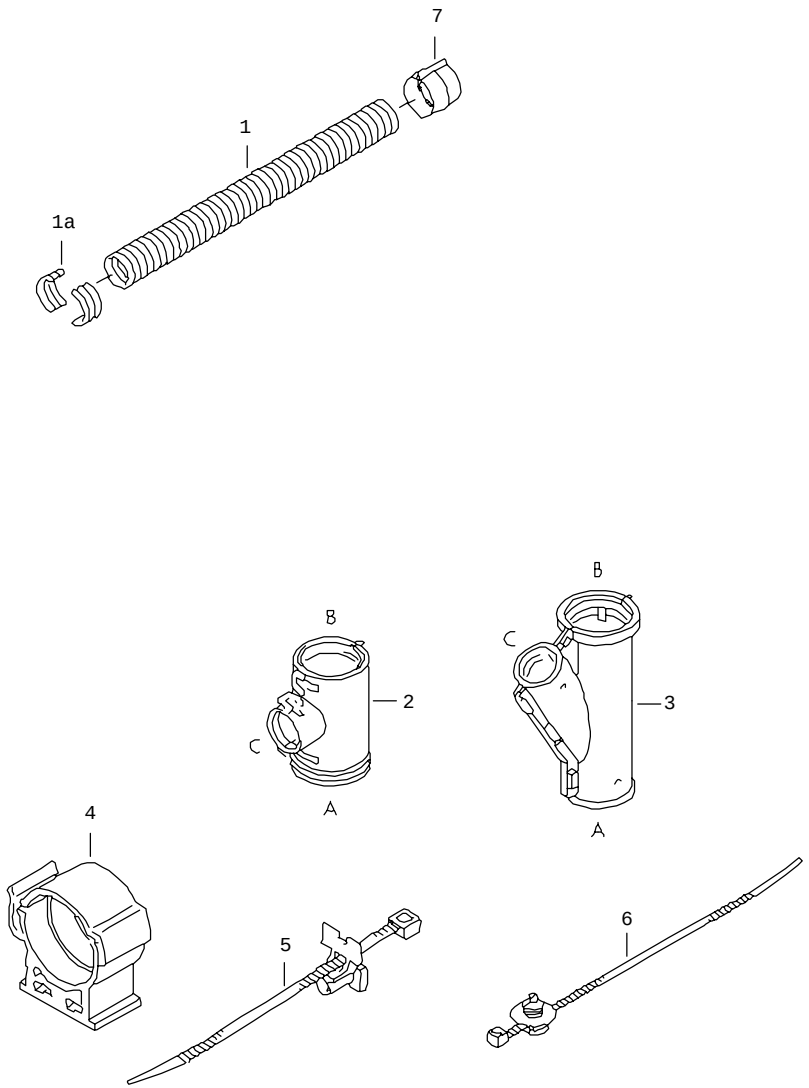

Pos	Part Number	Name	Remarks	Qty	Model
		corrugated pipe			
(1)	N 906 355 17	corrugated pipe	5000X4,5	1	
(1)	N 906 332 22	corrugated pipe	5000X7,5	1	
(1)	N 907 735 01	corrugated pipe	5000X10	1	
(1)	N 907 736 01	corrugated pipe	5000X13	1	
(1)	N 907 737 01	corrugated pipe	5000X17	1	
(1)	N 907 738 01	corrugated pipe	5000X22	1	
(1)	N 907 745 01	corrugated pipe	5000X26	1	
(1)	535 971 820 C	corrugated pipe	1000X22	1	
(1)	895 971 788	corrugated pipe area:	260X22 -200/+250 C	1	
(1)	893 971 788 B	corrugated pipe area:	400X17 -200/+250 C	1	
(1)	893 971 788 C	corrugated pipe area:	450X14 -200/+250 C	1	
1A	N 907 484 01	adapter corrugated pipe	22/17	1	
		corrugated pipe t piece for corrugated pipe:	A-B-C		
(2)	N 906 688 01	corrugated pipe t piece	7,5-7,5-7,5	X	
(2)	N 906 689 01	corrugated pipe t piece	10-7,5-7,5	X	
(2)	N 906 692 01	corrugated pipe t piece	13-10-10	X	
(2)	N 906 693 01	corrugated pipe t piece	13-13-7,5	X	
(2)	N 906 694 01	corrugated pipe t piece	13-7,5-13	X	
(2)	N 906 695 01	corrugated pipe t piece	17-17-10	X	
(2)	N 906 696 01	corrugated pipe t piece	17-17-7,5	X	
(2)	N 906 697 01	corrugated pipe t piece	17-13-13	X	
(2)	N 906 802 01	corrugated pipe t piece	17-13-7,5	X	
(2)	N 906 804 01	corrugated pipe t piece	22-22-4,5	X	
(2)	N 906 805 01	corrugated pipe t piece	22-13-17	X	

Pos	Part Number	Name	Remarks	Qty	Model
(2)	N 906 806 01	corrugated pipe t piece	22-22-22	X	
(2)	N 906 890 01	corrugated pipe t piece	22-22-13	X	
(2)	N 906 892 01	corrugated pipe t piece	26-17-17	X	
(2)	N 906 893 01	corrugated pipe t piece	17-13-10	X	
(2)	N 907 018 01	corrugated pipe t piece	7,5-7,5-5	X	
(2)	N 907 019 01	corrugated pipe t piece	10-10-6,9	X	
(2)	N 907 023 01	corrugated pipe t piece	22-22-8,5	X	
(2)	N 907 047 01	corrugated pipe t piece	22-17-13	X	
(2)	N 907 048 01	corrugated pipe t piece	22-22-7,5	X	
(2)	N 907 024 01	corrugated pipe t piece	26-26-8,5	X	
(2)	N 907 065 01	corrugated pipe t piece	26-22-22	X	
		corrugated pipe y piece for corrugated pipe:	A-B-C		
(3)	037 972 645	corrugated pipe y piece	7,5-7,5-4,5	X	
(3)	N 906 807 01	corrugated pipe y piece	7,5-4,5-4,5	X	
(3)	N 906 809 01	corrugated pipe y piece	22-17-10	X	
(3)	N 906 812 01	corrugated pipe y piece	22-17-13	X	
(3)	N 907 183 01	corrugated pipe y piece	22-22-22	X	
(3)	N 907 318 01	corrugated pipe y piece	26-22-22	1	
		corrugated pipe piece			
(4)	N 906 979 01	bracket for corrugated pipe	13	X	
(4)	N 906 980 01	bracket for corrugated pipe	17	X	
(4)	N 906 981 01	bracket for corrugated pipe	22	X	
(4)	N 906 982 01	bracket for corrugated pipe	26	X	
5	1J0 971 838	cable binder with bracket for plastic pin:	5X200 5	X	
6	N 906 661 01	cable binder hole/sheet metal thickness:	4,5X200 6,5 / 0,3-3,0	X	

Pos	Part Number	Name	Remarks	Qty	Model
		corrugated pipe end piece			
(7)	N 906 819 01	corrugated pipe end piece	4,5	X	
(7)	N 906 820 01	corrugated pipe end piece	7,5	X	
(7)	N 906 821 01	corrugated pipe end piece	10	X	
(7)	N 906 822 01	corrugated pipe end piece	13	X	
(7)	N 906 826 01	corrugated pipe end piece	17	X	
(7)	N 906 827 01	corrugated pipe end piece	22	X	

Model	Year	MG	SG	Illustration	VIN No.	Update	16:43	18.02.20100	ETKA
EL	90	9	71	979-10		336			

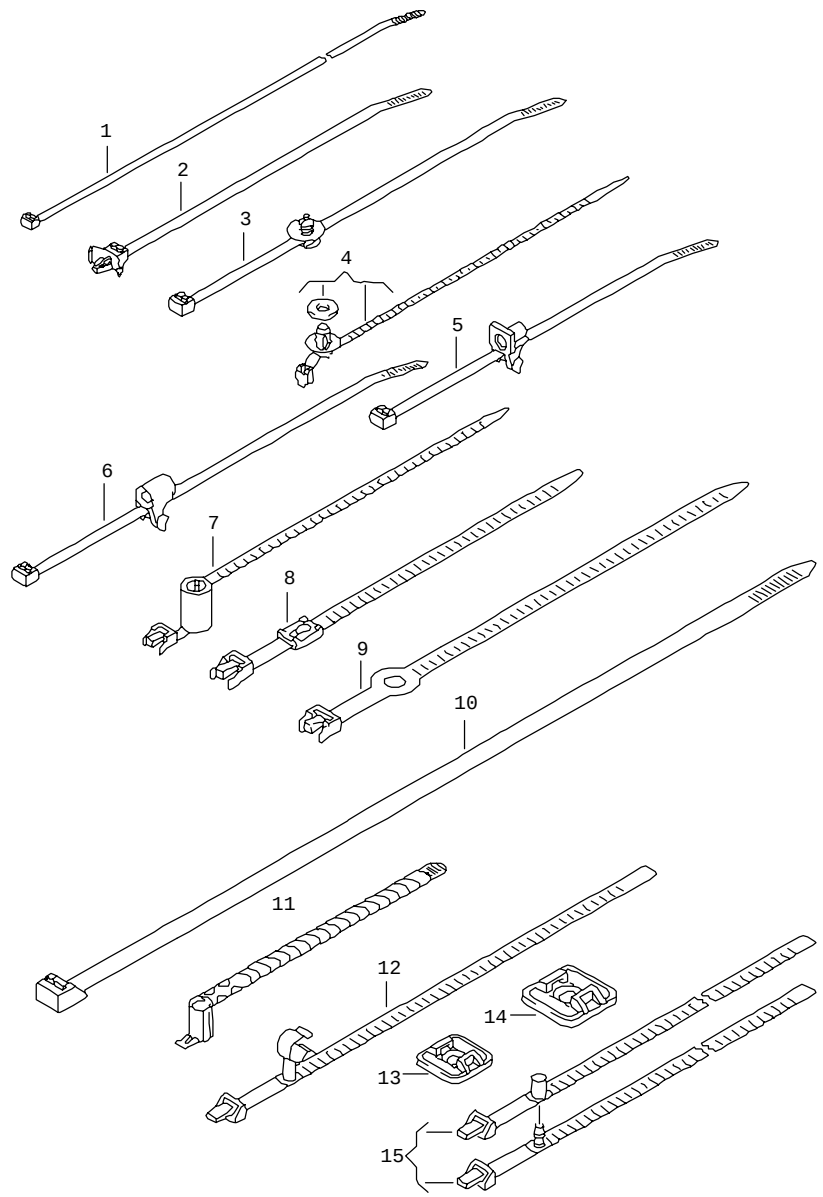

Pos	Part Number	Name	Remarks	Qty	Model
		cable binder retaining plate for cable binder (adhesive)			
1	N 020 902 2	cable binder	6X246	X	
(1)	N 020 904 8	cable binder	2,5X144	X	
2	1H0 971 850	cable binder hole/sheet metal thickness:	4,6X215 8,0 / 0,6-2,5	X	
3	N 906 661 01	cable binder hole/sheet metal thickness:	4,5X200 6,5 / 0,3-3,0	X	
(3)	N 906 881 01	cable binder hole/sheet metal thickness:	4,6X150 5,0 / 0,6-1,5	X	
(3)	N 900 603 01	cable binder hole/sheet metal thickness:	6,5X175 6,3 / 0,6-3,5	10	
4	1J0 957 818 A	cable binder gasket for base plate hole/sheet metal thickness: for door or dashboard	4,5X162 6,5 / 0,6-1,5	X	
(4)	N 907 104 01	cable binder hole/sheet metal thickness:	7,0X165 6,2 / 0,8-2,5	X	
5	1J0 971 838	cable binder with bracket for plastic pin:	5X200 5	X	
6	1J0 971 838 A	cable binder with bracket for welded pin:	5X200 5	X	
(6)	N 904 449 01	cable binder	5X230	X	
7	N 903 571 01	cable binder	5X171/M8	X	
8	811 971 850	cable binder	7X165	1	
9	N 905 786 01	cable binder	8X216	X	
10	8A9 971 850 A	cable binder	530X14	X	
11	8D0 971 850 C	cable binder welded pin	9/6X119 6MM	X	
(11)	N 906 437 01	cable binder with bracket for welded pin:	10X187 5	X	
(11)	N 906 333 01	cable binder with bracket for welded pin:	10X100 5	X	
12	443 957 818 C	cable binder	7X273-8	1	

Pos	Part Number	Name	Remarks	Qty	Model
13	000 971 010	retaining plate for cable binder (adhesive)	19X19MM	X	
		as required use:	N 020 902 2		
14	000 971 010 A	retaining plate for cable binder (adhesive)	27X27MM	X	
		as required use:	N 020 902 2		
15	4A0 820 199	double cable binder		X	
-	000 097 401	box with cable connectors and crimping tool comprising:		1	
-	000 097 405	crimping tool		1	

Pos	Part Number	Name	Remarks	Qty	Model

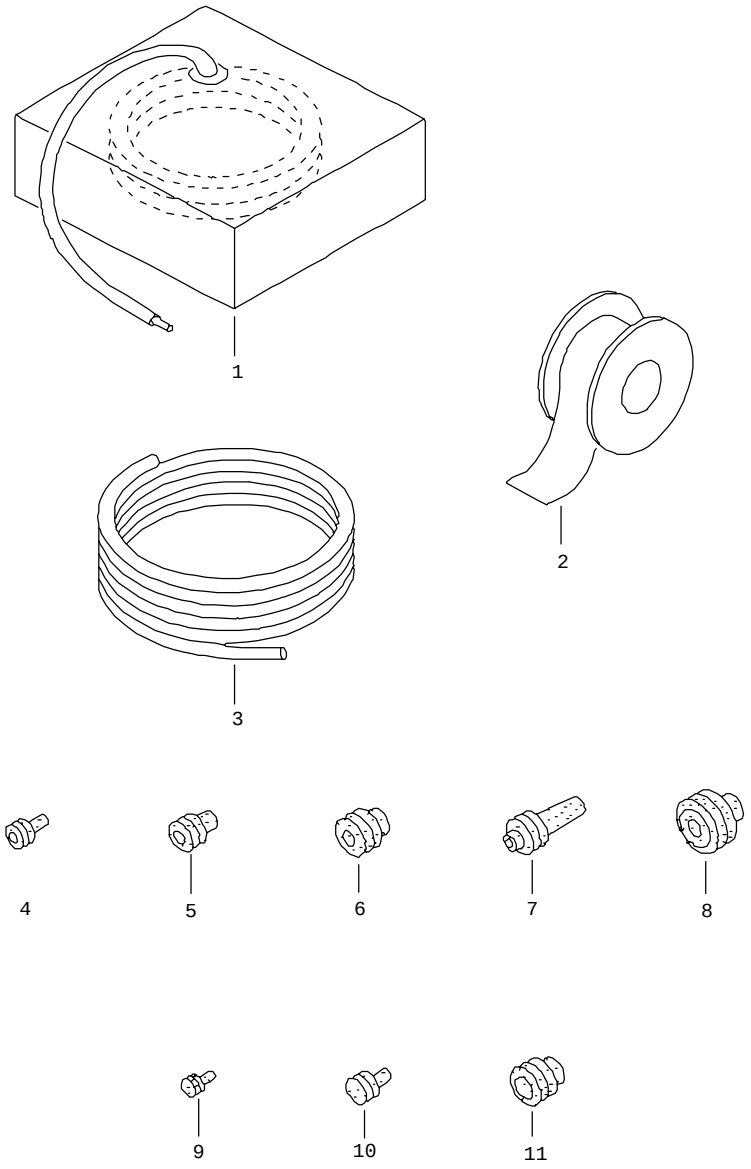

Pos	Part Number	Name	Remarks	Qty	Model
		electric cable insulating tape insulating hose 1 set of shrink fit sleeves can be welded watertight			
(1)	000 979 980	electric cable in 10m bag	yellow	1	0,35
(1)	000 979 981	electric cable in 10m bag	yellow	1	0,5
(1)	000 979 982	electric cable in 10m bag	yellow	1	1
(1)	000 979 982 B	electric cable in 3m bag -high temperatut resist.-	yellow	1	1
(1)	000 979 983	electric cable in 10m bag	yellow	1	1,5
(1)	000 979 984	electric cable in 10m bag	yellow	1	2,5
(1)	000 979 985	electric cable in 5m bag	yellow	1	4
(1)	000 979 986	electric cable in 5m bag	yellow	1	6
(1)	N 900 120 08	resistance cable (green) in coils of 50m 'order unit 50'	14 OHM/M	*	
(1)	N 900 120 04	resistance cable (transparent/ green) in coils of 50m 'order unit 50'	0,5 OHM/M	*	
(1)	N 900 120 05	resistance cable (transparent/ black) in coils of 50m 'order unit 50'	0,27 OHM/M	*	
2	N 103 113 04	insulating tape	0,15X19 yellow	1	
3	N 018 004 1	insulating hose in coils of 5m 'order unit 5'	4X0,5	*	
(3)	N 018 007 4	insulating hose in coils of 5m 'order unit 5'	W7X0,6	*	
(3)	N 900 183 01	insulating hose in coils of 5m high temperature resistant 'order unit 5'	yellow 11X0,7 +180C/-25C	*	

Pos	Part Number	Name	Remarks	Qty	Model
(3)	N 900 183 02	insulating hose in coils of 5m high temperature resistant 'order unit 5'	brown 11X0,7 +250C/-40C	*	
(3)	N 018 014 1	insulating hose in coils of 5m 'order unit 5'	14X0,8	*	
-	000 979 990	1 set of shrink fit sleeves can be welded watertight contents of package:	3MM >> 1MM 20 STK	X	
-	000 979 991	1 set of shrink fit sleeves can be welded watertight contents of package:	6MM >> 2MM 12 STK	X	
-	000 979 992	1 set of shrink fit sleeves can be welded watertight contents of package:	12MM >> 4MM 8 STK	X	
		single wiring seal			
(4)	3B0 972 742 B	single wiring seal for wire cross section:	3,6X8,5 yellow 0,35	X	
(4)	3B0 972 742 C	single wiring seal for wire cross section:	3,6X8,5 green 0,5-0,75	X	
4	357 972 740 D	single wiring seal for wire cross section:	3,9X7,8 grey 0,5-1,0	X	
(4)	357 972 740 E	single wiring seal for wire cross section:	3,9X7,8 black 0,35-0,5	X	
5	357 972 741	single wiring seal for wire cross section:	5,6X7,8 blue 1,0	X	
(5)	357 972 741 A	single wiring seal for wire cross section:	5,6X7,8 red 1,5	X	
(5)	357 972 741 B	single wiring seal for wire cross section:	5,6X7,8 yellow orange 2,5	X	
(6)	3B0 972 742	single wiring seal for wire cross section:	8,2X8,5 white 1,5-2,5	X	
(6)	3B0 972 742 A	single wiring seal for wire cross section:	8,2X8,5 yellow 4,0	X	
6	357 972 742	single wiring seal for wire cross section:	9,0X7,8 yellow 1,0	X	
(6)	357 972 742 A	single wiring seal for wire cross section:	9,0X7,8 white 1,5	X	
(6)	357 972 742 B	single wiring seal for wire cross section:	9,0X7,8 red 2,5	X	
(6)	357 972 742 C	single wiring seal for wire cross section:	9,0X7,8 green 4,0	X	
(6)	357 972 742 E	single wiring seal for wire cross section:	9,0X7,8 blue 4,0	X	
(6)	357 972 742 D	single wiring seal for wire cross section:	9,0X7,8 grey 6,0	X	
7	357 972 743	single wiring seal for wire cross section:	9,0X23,5 blue 1,5	X	
8	357 972 744	single wiring seal for wire cross section:	16,2X15,0 orange 4,0	X	
(8)	357 972 744 A	single wiring seal for wire cross section:	16,2X15,0 light blue 6,0	X	
		plug			
(9)	3B0 972 840	plug	3,6X8,5 blue	X	
9	357 972 840	plug	4,0X7,8 white	X	
10	357 972 841	plug	5,6X7,8 green	X	
11	357 972 842	plug	9,0 black	X	

Pos	Part Number	Name	Remarks	Qty	Model
		flat contact cable shoe cyl. connector with solder pin			
-	111 971 511	junction box		X	
-	311 971 935	push-on connector		1	
-	443 971 937 A	spring contact		1	
-	111 971 941	flat sleeve	6,3X2,5	X	
-	141 971 945	flat sleeve	A2,8X1	X	
-	111 971 949 A	cable shoe	A4,0	X	
-	111 971 949 B	cable shoe	A6,0	X	
-	111 971 945 C	cable shoe	A4,0	X	
-	111 971 945 D	cable shoe	A6,0	X	
-	111 971 945 E	cable shoe	A8,0	X	
-	111 971 947 A	cable shoe	A4,0	X	
-	111 971 947 B	cable shoe	A6,0	X	
-	111 971 948	cable shoe	8 4-6MM	1	
-	111 971 948 A	cable shoe	10 4-6MM	1	
-	111 971 949 A	cable shoe	A4,0	X	
-	111 971 949 B	cable shoe	A6,0	X	
-	111 971 950	cable shoe	A8 1-2,5	2	
-	443 972 982 A	cyl. connector with solder pin	2,5	X	
-	443 972 982 B	cyl. connector with solder pin	4,0	X	
-	443 972 982 D	cyl. connector with solder pin	2,5	X	
-	2D0 972 982	cyl. connector with solder pin	2,5/17MM	X	
-	2D0 972 982	cyl. connector with solder pin	2,5/17MM	X	
-	2D0 972 982 A	cyl. connector with solder pin	2,5/12MM	X	
-	2D0 972 982 D	cyl. connector with solder pin	4,0/15MM	X	
-	2D0 972 982 E	cyl. connector with solder pin	4,0/21MM	X	
-	2D0 972 982 F	cyl. connector with solder pin	4,0/15MM	X	

Pos	Part Number	Name	Remarks	Qty	Model
-	8A0 972 980 A	cyl. connector with solder pin	27,5X5X3,5	X	1,0-2,5

Pos	Part Number	Name	Remarks	Qty	Model

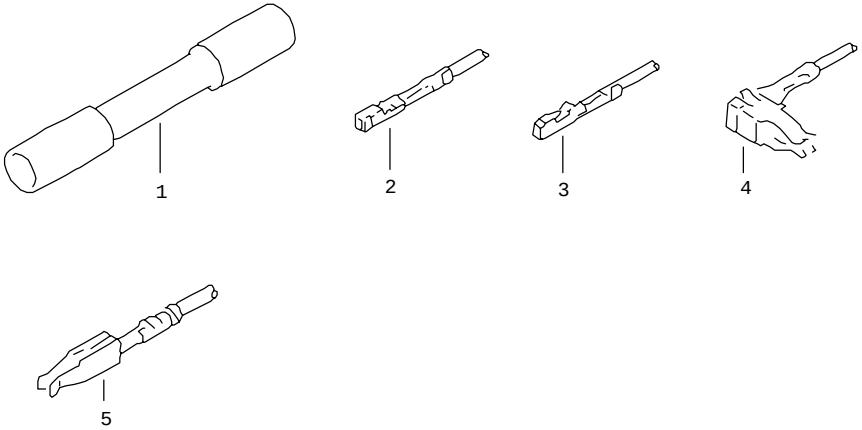

Pos	Part Number	Name	Remarks	Qty	Model
		single wiring also use: as required use: see illustration:	0,5 111 971 941 A 000 979 990 974-81 1,0 974-82 2,5 974-83 4,0 974-83 6,0		
-	000 979 990	1 set of shrink fit sleeves can be welded watertight contents of package:	3MM >> 1MM 20 STK	X	
(1)	111 971 940 A	butt connector, watertight, can be welded	0,5-1,0 red	X	
1	111 971 941 A	butt connector, watertight, can be welded	0,35-0,5 yellow	X	
2	000 979 002	1 set of single wires each with 2 contacts, in bag of 5 'order unit 5' flat connector with retaining lug	0,5 0,63	X	
3	000 979 003 A	1 set of single wires each with 2 contacts, in bag of 5 'order unit 5' flat connector with retaining lug	0,5 gold plated 0,63	X	
4	>000 979 004	1 set of single wires each with 2 contacts, in bag of 5 'order unit 5' flat contact bracket	0,5 3,5	X	
5	000 979 006	1 set of single wires each with 2 contacts, in bag of 5 'order unit 5' flat contact	0,5 2,4	X	
-	000 979 007	1 set of single wires each with 2 contacts, in bag of 5 'order unit 5' flat connector with retaining lug	0,5 0,63	X	

Pos	Part Number	Name	Remarks	Qty	Model
-	000 979 007 A	1 set of single wires each with 2 contacts, in bag of 5 'order unit 5' flat connector with retaining lug	0,5 gold plated 0,63	X	
-	000 979 008	1 set of single wires each with 2 contacts, in bag of 5 'order unit 5' flat connector with retaining lug	0,5 0,63	X	
-	000 979 008 A	1 set of single wires each with 2 contacts, in bag of 5 'order unit 5' flat connector with retaining lug	0,5 gold plated 0,63	X	
-	000 979 009	1 set of single wires each with 2 contacts, in bag of 5 'order unit 5' flat connector with retaining lug	0,5 0,63	X	
-	000 979 009 A	1 set of single wires each with 2 contacts, in bag of 5 'order unit 5' flat connector with retaining lug	0,5 0,63	X	
-	000 979 010	1 set of single wires each with 2 contacts, in bag of 5 'order unit 5' flat connector with retaining lug	0,5 0,63	X	
-	000 979 010 A	1 set of single wires each with 2 contacts, in bag of 5 'order unit 5' flat connector with retaining lug	0,5 0,63	X	
-	000 979 011	1 set of single wires each with 2 contacts, in bag of 5 'order unit 5' flat connector with retaining lug	0,5 0,63	X	

Pos	Part Number	Name	Remarks	Qty	Model
-	000 979 012	1 set of single wires each with 2 contacts, in bag of 5 'order unit 5' flat connector with retaining lug	0,5 0,63	X	
-	000 979 012 A	1 set of single wires each with 2 contacts, in bag of 5 'order unit 5' flat connector with retaining lug	0,5 0,63	X	
-	000 979 013	1 set of single wires each with 2 contacts, in bag of 5 'order unit 5' flat contact	0,5 2,8	X	
-	000 979 014 A	1 set of single wires each with 2 contacts, in bag of 5 'order unit 5' flat connector with retaining lug	0,5 0,63	X	
-	000 979 015	1 set of single wires each with 2 contacts, in bag of 5 'order unit 5' flat connector with retaining lug	0,5 0,63	X	
-	000 979 015 A	1 set of single wires each with 2 contacts, in bag of 5 'order unit 5' flat connector with retaining lug	0,5 0,63 gold plated	X	
-	000 979 016	1 set of single wires each with 2 contacts, in bag of 5 'order unit 5' flat contact	0,35 2,8	X	
-	000 979 017	1 set of single wires each with 2 contacts, in bag of 5 'order unit 5' flat connector with retaining lug	0,5 0,63	X	

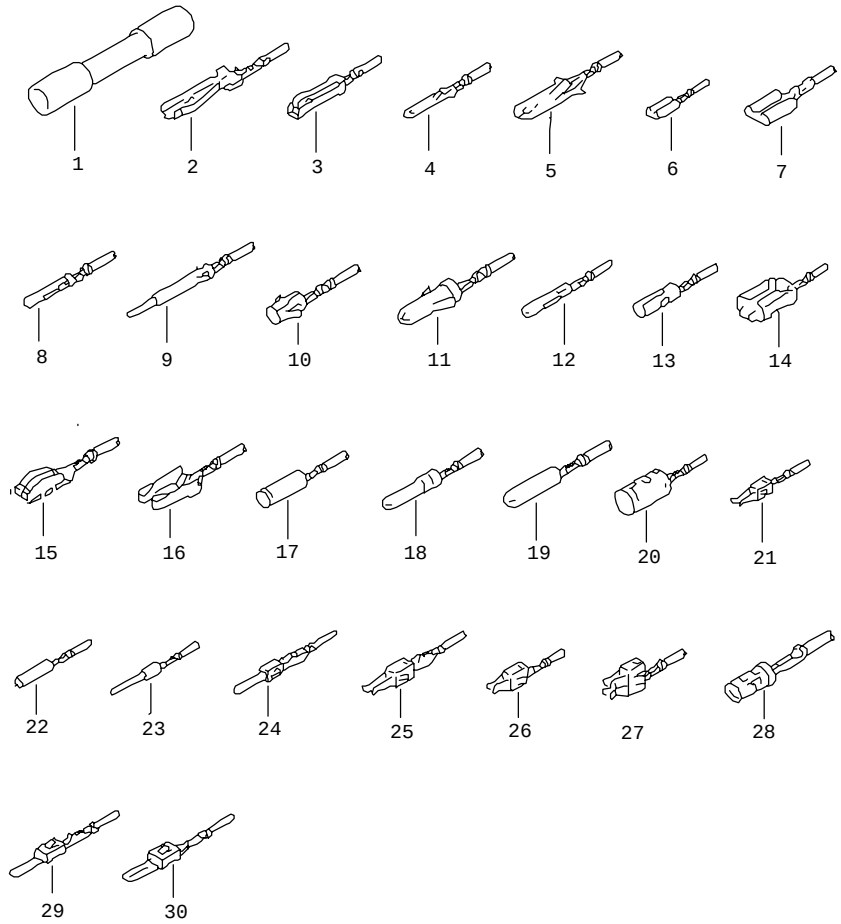

Pos	Part Number	Name	Remarks	Qty	Model
		single wiring	1,0		
		also use:	111 971 940 A		
		as required use:	000 979 990		
			000 979 991		
		see illustration:	974-80 0,5		
			974-82 2,5		
			974-83 4,0		
			974-83 6,0		
-	000 979 990	1 set of shrink fit sleeves can be welded watertight	3MM >> 1MM	X	
		contents of package:	20 STK		
-	000 979 991	1 set of shrink fit sleeves can be welded watertight	6MM >> 2MM	X	
		contents of package:	12 STK		
1	111 971 940 A	butt connector, watertight, can be welded	0,5-1,0	X	
			red		
2	000 979 101	1 set of single wires each with 2 contacts, in bag of 5 'order unit 5'	1,0	X	
		spring contact	0,5		
3	000 979 102	1 set of single wires each with 2 contacts, in bag of 5 'order unit 5'	1,0	X	
		spring contact	3,0		
4	000 979 103	1 set of single wires each with 2 contacts, in bag of 5 'order unit 5'	1,0	X	
		flat connector with retaining lug	2,8		
5	000 979 104	1 set of single wires each with 2 contacts, in bag of 5 'order unit 5'	1,0	X	
		flat connector with retaining lug	6,3		
5	000 979 104	1 set of single wires each with 2 contacts, in bag of 5 'order unit 5'	1,0	X	
		flat connector with retaining lug	6,3		

Pos	Part Number	Name	Remarks	Qty	Model
6	000 979 105	1 set of single wires each with 2 contacts, in bag of 5 'order unit 5' flat sleeve	1,0 2,8	X	
7	000 979 106	1 set of single wires each with 2 contacts, in bag of 5 'order unit 5' flat sleeve	1,0 2,8	X	
(7)	000 979 107	1 set of single wires each with 2 contacts, in bag of 5 'order unit 5' flat connector with retaining lug	1,0 6,3	X	
8	000 979 108	1 set of single wires each with 2 contacts, in bag of 5 'order unit 5' cylindrical connector with retaining lug	1,0 1,6	X	
9	000 979 109	1 set of single wires each with 2 contacts, in bag of 5 'order unit 5' cyl.connector with retain. lug	1,0 1,6	X	
10	000 979 110	1 set of single wires each with 2 contacts, in bag of 5 'order unit 5' cylindrical connector with retaining lug	1,0 3,5	X	
10	000 979 110	1 set of single wires each with 2 contacts, in bag of 5 'order unit 5' cylindrical connector with retaining lug	1,0 3,5	X	
11	000 979 111	1 set of single wires each with 2 contacts, in bag of 5 'order unit 5' cyl.connector with retain. lug	1,0 3,5	X	
12	000 979 112	1 set of single wires each with 2 contacts, in bag of 5 'order unit 5' cyl.connector with retain. lug	1,0 2,1	X	
13	000 979 113	1 set of single wires each with 2 contacts, in bag of 5 'order unit 5' cyl.connector with retain. lug	1,0 2,1	X	
14	000 979 114	1 set of single wires each with 2 contacts, in bag of 5 'order unit 5' flat connector with retaining lug	1,0 6,3	X	
15	000 979 115	1 set of single wires each with 2 contacts, in bag of 5 'order unit 5' flat contact	1,0 6,2	X	
16	000 979 116	1 set of single wires each with 2 contacts, in bag of 5 'order unit 5' spring contact	1,0 6,3	X	
17	000 979 117	1 set of single wires each with 2 contacts, in bag of 5 'order unit 5' round connector	1,0 2,5	X	
(17)	000 979 117 A	1 set of single wires each with 2 contacts, in bag of 5 'order unit 5' round connector	1,0 gold plated 2,5	X	
18	000 979 118	1 set of single wires each with 2 contacts, in bag of 5 'order unit 5' cyl.connector with retain. lug	1,0 2,5	X	
(18)	000 979 118 A	1 set of single wires each with 2 contacts, in bag of 5 'order unit 5' cyl.connector with retain. lug	1,0 gold plated 2,5	X	

Pos	Part Number	Name	Remarks	Qty	Model
19	000 979 119	1 set of single wires each with 2 contacts, in bag of 5 'order unit 5' round connector	1,0 4,0	X	
(19)	000 979 119 A	1 set of single wires each with 2 contacts, in bag of 5 'order unit 5' round connector	1,0 gold plated 4,0	X	
20	000 979 120	1 set of single wires each with 2 contacts, in bag of 5 'order unit 5' round connector	1,0 4,0	X	
(20)	000 979 120 A	1 set of single wires each with 2 contacts, in bag of 5 'order unit 5' round connector	1,0 gold plated 4,0	X	
21	000 979 121	1 set of single wires each with 2 contacts, in bag of 5 'order unit 5' flat contact	1,0 2,4	X	
22	000 979 122	1 set of single wires each with 2 contacts, in bag of 5 'order unit 5' round connector	1,0 1,0	X	
23	000 979 123	1 set of single wires each with 2 contacts, in bag of 5 'order unit 5' round connector	1,0 1,0	X	
24	000 979 132	1 set of single wires each with 2 contacts, in bag of 5 'order unit 5' flat connector with retaining lug	1,0 1,5	X	
(24)	000 979 132 A	1 set of single wires each with 2 contacts, in bag of 5 'order unit 5' flat connector with retaining lug	1,0 gold plated 1,5	X	
25	000 979 131	1 set of single wires each with 2 contacts, in bag of 5 'order unit 5' flat contact	1,0 1,5	X	
(25)	000 979 131 A	1 set of single wires each with 2 contacts, in bag of 5 'order unit 5' flat contact	1,0 gold plated 1,5	X	
(26)	000 979 126	1 set of single wires each with 2 contacts, in bag of 5 'order unit 5' flat contact	1,0 2,8	X	
26	000 979 133	1 set of single wires each with 2 contacts, in bag of 5 'order unit 5' flat contact	1,0 2,8	X	
(26)	000 979 133 A	1 set of single wires each with 2 contacts, in bag of 5 'order unit 5' flat contact	1,0 gold plated 2,8	X	
(26)	000 979 133 B	1 set of single wires (high temperature resistant) each with 2 contacts, in bag of 5 'order unit 5' flat contact	1,0 2,8	X	
(26)	000 979 133 AB	1 set of single wires (high temperature resistant) each with 2 contacts, in bag of 5 'order unit 5' flat contact	1,0 gold plated 2,8	X	
(27)	000 979 135	1 set of single wires each with 2 contacts, in bag of 5 'order unit 5' flat contact with retaining lug	1,0 4,8	X	
28	000 979 128	1 set of single wires each with 2 contacts, in bag of 5 'order unit 5' round connector	1,0 2,5	X	

Pos	Part Number	Name	Remarks	Qty	Model
29	000 979 129	1 set of single wires each with 2 contacts, in bag of 5 'order unit 5' flat connector with retaining lug	1,0 2,8	X	
(29)	000 979 129 A	1 set of single wires each with 2 contacts, in bag of 5 'order unit 5' flat connector with retaining lug	1,0 gold plated 2,8	X	
(29)	000 979 134	1 set of single wires each with 2 contacts, in bag of 5 'order unit 5' flat connector with retaining lug	1,0 2,8	X	
(29)	000 979 134 A	1 set of single wires each with 2 contacts, in bag of 5 'order unit 5' flat connector with retaining lug	1,0 gold plated 2,8	X	
30	000 979 130	1 set of single wires each with 2 contacts, in bag of 5 'order unit 5' flat connector with retaining lug	1,0 4,8	X	
(30)	000 979 136	1 set of single wires each with 2 contacts, in bag of 5 'order unit 5' flat connector with retaining lug	1,0 4,8	X	
-	000 979 137	1 set of single wires each with 2 contacts, in bag of 5 'order unit 5' cable shoe	1,0 A6,0	X	
-	000 979 138	1 set of single wires each with 2 contacts, in bag of 5 'order unit 5' flat connector with retaining lug	1,0 2,8	X	
-	000 979 139	1 set of single wires each with 2 contacts, in bag of 5 'order unit 5' cyl.connector with retain. lug	1,0 1,6	X	
-	000 979 140	1 set of single wires each with 2 contacts, in bag of 5 'order unit 5' round connector	1,0 2,5	X	
-	000 979 141	1 set of single wires each with 2 contacts, in bag of 5 'order unit 5' round connector	1,0 2,8	X	
-	000 979 142	1 set of single wires each with 2 contacts, in bag of 5 'order unit 5' flat contact	1,0 2,8	X	
-	000 979 143	1 set of single wires each with 2 contacts, in bag of 5 'order unit 5' angled connector	1,0 4,8	X	
-	000 979 144	1 set of single wires each with 2 contacts, in bag of 5 'order unit 5' flat connector with retaining lug	1,0 6,3	X	
-	000 979 145	1 set of single wires each with 2 contacts, in bag of 5 'order unit 5' round connector	1,0 2,8	X	
-	000 979 146	1 set of single wires each with 2 contacts, in bag of 5 'order unit 5' cyl.connector with retain. lug	1,0 2,8	X	
-	000 979 147	1 set of single wires each with 2 contacts, in bag of 5 'order unit 5' flat connector with retaining lug	1,0 5,0	X	

Pos	Part Number	Name	Remarks	Qty	Model
-	000 979 148	1 set of single wires each with 2 contacts, in bag of 5 'order unit 5' round connector	1,0 1,6	X	
-	000 979 149	1 set of single wires each with 2 contacts, in bag of 5 'order unit 5' round connector	1,0 1,6	X	

Pos	Part Number	Name	Remarks	Qty	Model

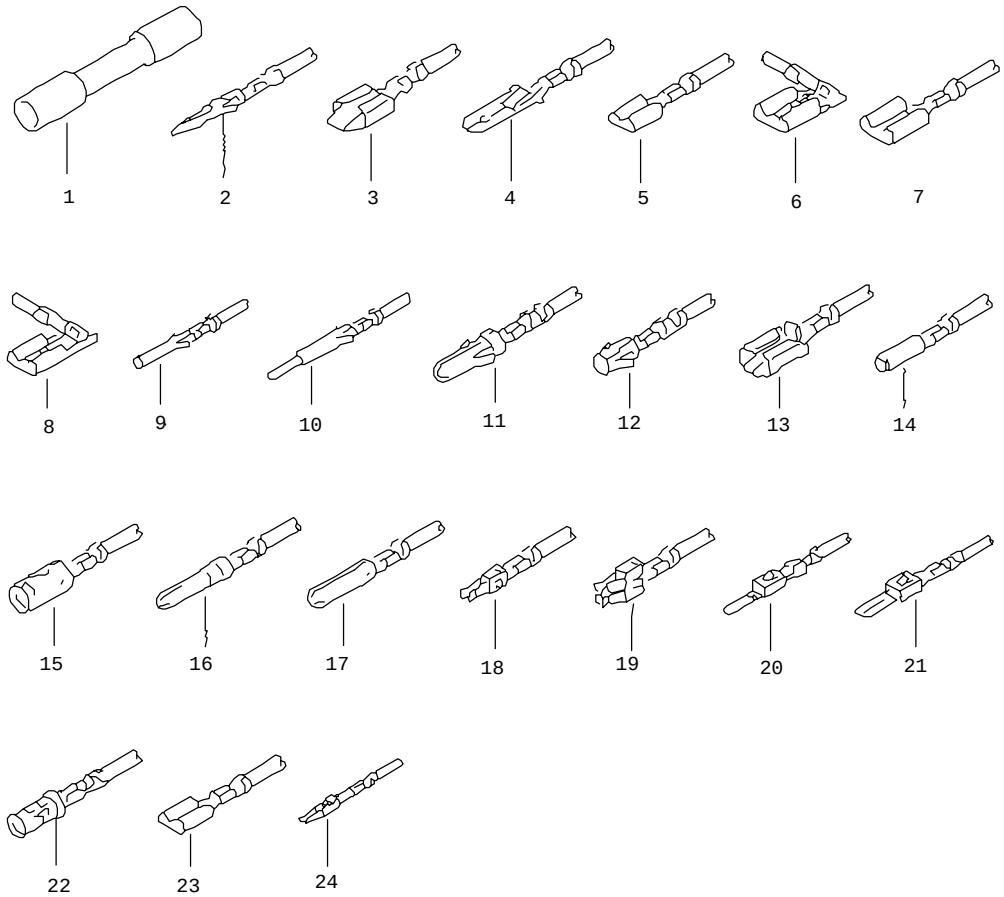

Pos	Part Number	Name	Remarks	Qty	Model
		single wiring also use: as required use: see illustration:	2,5 111 971 939 B 000 979 991 974-80 0,5 974-81 1,0 974-83 4,0 974-83 6,0		
-	000 979 991	1 set of shrink fit sleeves can be welded watertight contents of package:	6MM >> 2MM 12 STK	X	
1	111 971 939 B	butt connector, watertight, can be welded	1,5-2,5 blue	X	
2	000 979 201	1 set of single wires each with 2 contacts, in bag of 5 'order unit 5' cyl.connector with retain. lug	2,5	X	
3	000 979 202	1 set of single wires each with 2 contacts, in bag of 5 'order unit 5' spring contact	2,5	X	
4	000 979 203	1 set of single wires each with 2 contacts, in bag of 5 'order unit 5' flat connector	2,5 6,3	X	
5	000 979 204	1 set of single wires each with 2 contacts, in bag of 5 'order unit 5' flat connector with retaining lug	2,5 6,3	X	
6	000 979 205	1 set of single wires each with 2 contacts, in bag of 5 'order unit 5' angled connector	2,5 7,7	X	
6	000 979 205	1 set of single wires each with 2 contacts, in bag of 5 'order unit 5' angled connector	2,5 7,7	X	

Pos	Part Number	Name	Remarks	Qty	Model
7	000 979 206	1 set of single wires each with 2 contacts, in bag of 5 'order unit 5' flat connector with retaining lug	2,5 7,7	X	
8	000 979 207	1 set of single wires each with 2 contacts, in bag of 5 'order unit 5' angled connector	2,5 6,3	X	
9	000 979 208	1 set of single wires each with 2 contacts, in bag of 5 'order unit 5' cylindrical connector with retaining lug	2,5 1,6	X	
10	000 979 209	1 set of single wires each with 2 contacts, in bag of 5 'order unit 5' cyl.connector with retain. lug	2,5 1,6	X	
11	000 979 210	1 set of single wires each with 2 contacts, in bag of 5 'order unit 5' cyl.connector with retain. lug	2,5 3,5	X	
12	000 979 211	1 set of single wires each with 2 contacts, in bag of 5 'order unit 5' cylindrical connector with retaining lug	2,5 3,5	X	
13	000 979 212	1 set of single wires each with 2 contacts, in bag of 5 'order unit 5' flat connector with retaining lug	2,5 6,3	X	
14	000 979 213	1 set of single wires each with 2 contacts, in bag of 5 'order unit 5' round connector	2,5 2,5	X	
(14)	000 979 213 A	1 set of single wires each with 2 contacts, in bag of 5 'order unit 5' round connector	2,5 gold plated 2,5	X	
15	000 979 214	1 set of single wires each with 2 contacts, in bag of 5 'order unit 5' round connector	2,5 4,0	X	
16	000 979 215	1 set of single wires each with 2 contacts, in bag of 5 'order unit 5' cyl.connector with retain. lug	2,5 2,5	X	
(16)	000 979 215 A	1 set of single wires each with 2 contacts, in bag of 5 'order unit 5' cyl.connector with retain. lug	2,5 gold plated 2,5	X	
17	000 979 216	1 set of single wires each with 2 contacts, in bag of 5 'order unit 5' round connector	2,5 4,0	X	
18	000 979 217	1 set of single wires each with 2 contacts, in bag of 5 'order unit 5' flat contact	2,5 3,5	X	
(18)	000 979 225	1 set of single wires each with 2 contacts, in bag of 5 'order unit 5' flat contact	2,5 2,8	X	
(18)	000 979 225 A	1 set of single wires each with 2 contacts, in bag of 5 'order unit 5' flat contact	2,5 gold plated 2,8	X	
19	000 979 227	1 set of single wires each with 2 contacts, in bag of 5 'order unit 5' flat contact with retaining lug	2,5 4,8	X	

Pos	Part Number	Name	Remarks	Qty	Model
20	000 979 219	1 set of single wires each with 2 contacts, in bag of 5 'order unit 5'	2,5	X	
		flat connector with retaining lug	2,8		
(20)	000 979 226	1 set of single wires each with 2 contacts, in bag of 5 'order unit 5'	2,5	X	
		flat connector with retaining lug	2,8		
(20)	000 979 226 A	1 set of single wires each with 2 contacts, in bag of 5 'order unit 5'	2,5 gold plated	X	
		flat connector with retaining lug	2,8		
(20)	000 979 226 A	1 set of single wires each with 2 contacts, in bag of 5 'order unit 5'	2,5 gold plated	X	
		flat connector with retaining lug	2,8		
21	000 979 220	1 set of single wires each with 2 contacts, in bag of 5 'order unit 5'	2,5	X	
		flat contact	4,8		
(21)	000 979 228	1 set of single wires each with 2 contacts, in bag of 5 'order unit 5'	2,5	X	
		flat connector with retaining lug	4,8		
22	000 979 221	1 set of single wires each with 2 contacts, in bag of 5 'order unit 5'	2,5	X	
		round connector	2,5		
23	000 979 222	1 set of single wires each with 2 contacts, in bag of 5 'order unit 5'	2,5	X	
		flat connector with retaining lug	6,3		
(23)	000 979 224	1 set of single wires each with 2 contacts, in bag of 5 'order unit 5'	2,5	X	
		flat connector with retaining lug	9,5		
24	000 979 223	1 set of single wires each with 2 contacts, in bag of 5 'order unit 5'	1,5	X	
		flat contact	2,4		
24	000 979 223	1 set of single wires each with 2 contacts, in bag of 5 'order unit 5'	1,5	X	
		flat contact	2,4		
-	000 979 230	1 set of single wires each with 2 contacts, in bag of 5 'order unit 5'	2,5	X	
		cable shoe	A6,0		
-	000 979 231	1 set of single wires each with 2 contacts, in bag of 5 'order unit 5'	2,5	X	
		flat connector with retaining lug	4,8		
-	000 979 232	1 set of single wires each with 2 contacts, in bag of 5 'order unit 5'	1,5	X	
		flat connector with retaining lug	4,8		
-	000 979 233	1 set of single wires each with 2 contacts, in bag of 5 'order unit 5'	2,5	X	
		flat connector with retaining lug	2,8		
-	000 979 234	1 set of single wires each with 2 contacts, in bag of 5 'order unit 5'	2,5	X	
		cylindrical connector with retaining lug	1,6		

Pos	Part Number	Name	Remarks	Qty	Model
-	000 979 235	1 set of single wires each with 2 contacts, in bag of 5 'order unit 5' round connector	2,5 4,0	X	
-	000 979 235	1 set of single wires each with 2 contacts, in bag of 5 'order unit 5' round connector	2,5 4,0	X	
-	000 979 236	1 set of single wires each with 2 contacts, in bag of 5 'order unit 5' flat connector with retaining lug	2,5 6,3	X	
-	000 979 237	1 set of single wires each with 2 contacts, in bag of 5 'order unit 5' flat contact	2,5 2,8	X	
-	000 979 238	1 set of single wires each with 2 contacts, in bag of 5 'order unit 5' round connector	2,5 2,8	X	
-	000 979 239	1 set of single wires each with 2 contacts, in bag of 5 'order unit 5' cyl.connector with retain. lug	2,5 2,8	X	
-	000 979 240	1 set of single wires each with 2 contacts, in bag of 5 'order unit 5' round connector	2,5 1,6	X	
-	000 979 241	1 set of single wires each with 2 contacts, in bag of 5 'order unit 5' round connector	2,5 1,6	X	

Pos	Part Number	Name	Remarks	Qty	Model

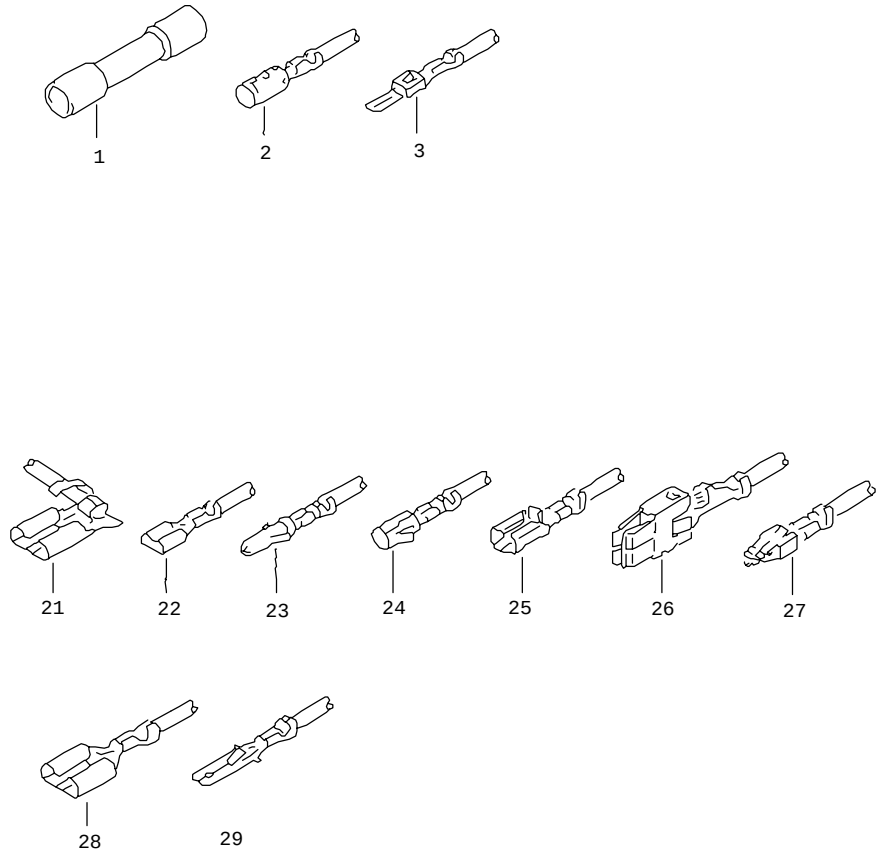

Pos	Part Number	Name	Remarks	Qty	Model
		single wiring	4,0		
		also use:	111 971 938 A		
		as required use:	000 979 992		
		see illustration:	974-80 0,5 974-81 1,0 974-82 1,5		
-	000 979 992	1 set of shrink fit sleeves can be welded watertight	12MM >> 4MM	X	
		contents of package:	8 STK		
1	111 971 938 A	butt connector, watertight, can be welded	4,0-6,0 yellow	X	
2	000 979 301	1 set of single wires each with 2 contacts, in bag of 4 'order unit 4'	4,0	X	
		round connector	4,0		
3	000 979 302	1 set of single wires each with 2 contacts, in bag of 4 'order unit 4'	4,0	X	
		flat contact	4,8		
4	000 979 303	1 set of single wires each with 2 contacts, in bag of 4 'order unit 4'	4,0	X	
		flat contact	4,8		
(23)	000 979 304	1 set of single wires each with 2 contacts, in bag of 4 'order unit 4'	4,0	X	
		cyl.connector with retain. lug	3,5		
(24)	000 979 305	1 set of single wires each with 2 contacts, in bag of 4 'order unit 4'	4,0	X	
		cylindrical connector with retaining lug	3,5		
(27)	000 979 306	1 set of single wires each with 2 contacts, in bag of 5 'order unit 5'	4,0	X	
		flat contact with retaining lug	4,8		

Pos	Part Number	Name	Remarks	Qty	Model
(3)	000 979 307	1 set of single wires each with 2 contacts, in bag of 5 'order unit 5' flat connector with retaining lug	4,0 4,8	X	
		single wiring also use: see illustration:	6,0 111 971 938 A 974-80 0,5 974-81 1,0 974-82 1,5		
1	111 971 938 A	butt connector, watertight, can be welded	4,0-6,0 yellow	X	
22	000 979 402	1 set of single wires each with 2 contacts, in bag of 3 'order unit 3' flat connector with retaining lug	6,0 6,3	X	
23	--- --- --- .	discontinued / replacement:	000 979 304		
25	000 979 405	1 set of single wires each with 2 contacts, in bag of 3 'order unit 3' flat connector with retaining lug	6,0 6,3	X	
26	000 979 406	1 set of single wires each with 2 contacts, in bag of 3 'order unit 3' flat contact	6,0 9,5	X	
27	000 979 407	1 set of single wires each with 2 contacts, in bag of 3 'order unit 3' flat contact with retaining lug	6,0 6,3	X	
28	000 979 408	1 set of single wires each with 2 contacts, in bag of 3 'order unit 3' flat connector with retaining lug	6,0 9,5	X	
29	000 979 409	1 set of single wires each with 2 contacts, in bag of 3 'order unit 3' flat connector with retaining lug	6,0 6,3	X	
-	000 979 410	1 set of single wires each with 2 contacts, in bag of 5 'order unit 5' cable shoe	6,0 A6,0	X	
-	000 979 411	1 set of single wires each with 2 contacts, in bag of 3 'order unit 3' flat contact	6,0 9,5	X	
-	000 979 412	1 set of single wires each with 2 contacts, in bag of 3 'order unit 3' flat contact	6,0 9,5	X	
-	000 979 413	1 set of single wires each with 2 contacts, in bag of 3 'order unit 3' cable shoe (screw connection) stop	6,0 A6,0/M6 left	X	
-	000 979 414	1 set of single wires each with 2 contacts, in bag of 3 'order unit 3' cable shoe (screw connection) stop	6,0 A6,0/M6 right	X	
-	000 979 415	1 set of single wires each with 2 contacts, in bag of 3 'order unit 3' cable shoe (screw connection)	6,0 A6,0/M8	X	